# Profec Cap PVC-U 3/8" female thread 10bar grey type plain (0110574)

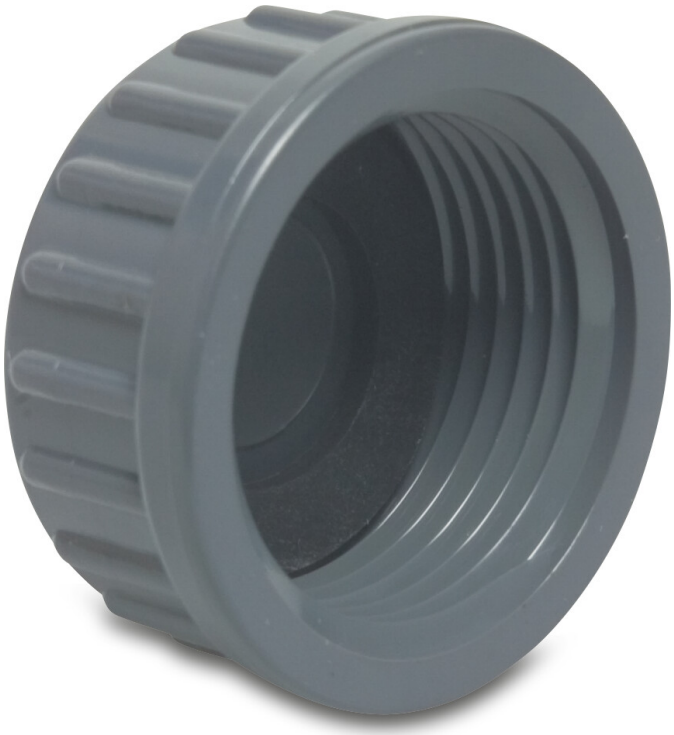

PROFEC

bosta
bringing water to life

# TECHNICAL SPECIFICATIONS

| | |
|---|---|
| Colour | grey |
| Type | plain |
| Material | PVC-U |
| Material seal | EPDM |
| Connection | female thread |
| Pressure | 10 bar |
| Size | 3/8" |
| WebshopURL | https://www.bosta.com/en-gb/profec-cap-pvc-u-3-8-female-thread-10bar-grey-type-plain-0110574 |

# DIMENSIONS

| | |
|---|---|
| H | 15 mm |
| ØDi-1 | 3/8 " |

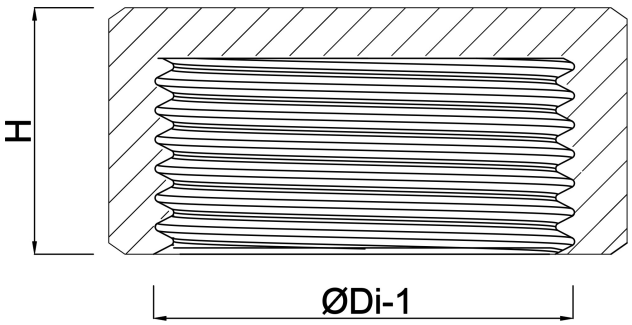

# PRODUCT INFORMATION

With flat rubber seal

## Last modified date: 30/10/2026

Bosta UK Ltd.
Reflection House
Olding Road
Bury St. Edmunds
Suffolk
IP33 3TA
T +44 (0) 1284 716580
E enquiries@bosta.co.uk
http://www.bosta.com

bosta
bringing water to life