Profec Flange welding neck steel DN40 x 48,3 mm DIN flange x butt welding black PN16 (1180478)



PROFEC

bosta
bringing water to life

TECHNICAL SPECIFICATIONS

Colour	black
Material	steel
Connection	DIN flange x butt welding
DIN Standard	DIN 2633
Flange	PN16
Size	DN40 x 48,3 mm
WebshopURL	https://www.bosta.com/en-gb/profec-flange-welding-neck-steel-dn40-x-48-3-mm-din-flange-x-butt-welding-black-pn16-1180478
Outer ø	150 mm
Weight	1.83 kg
Height	42 mm
Thickness	16 mm
PCD	110 mm
Bolt hole	18 mm
Holes	4

DIMENSIONS

O	18 mm
PCD	110 mm
ØDi-1	43.1 mm

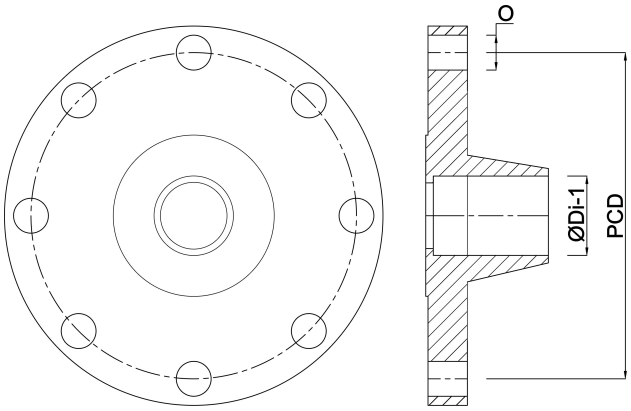

Last modified date: 01/11/2026

Bosta UK Ltd.
Reflection House
Olding Road
Bury St. Edmunds
Suffolk
IP33 3TA
T +44 (0) 1284 716580
E enquiries@bosta.co.uk
http://www.bosta.com

bosta
bringing water to life