Flange adaptor steel 5" x 133 mm square flange x butt welding black (0200591)



bosta
bringing water to life

TECHNICAL SPECIFICATIONS

Colour	black
Material	steel
Connection	square flange x butt welding
Thickness	8 mm
Holes	4
Size	5" x 133 mm
WebshopURL	https://www.bosta.com/en-gb/flange-adaptor-steel-5-x-133-mm-square-flange-x-butt-welding-black-0200591
Outer dimension flange	180x180

DIMENSIONS

G-1	150 mm
G-2	150 mm
Hole spacing	150 x 150 mm
Lb	180 mm
Lb-2	180 mm
O	13 mm

T	8 mm
ØDi-1	125 mm

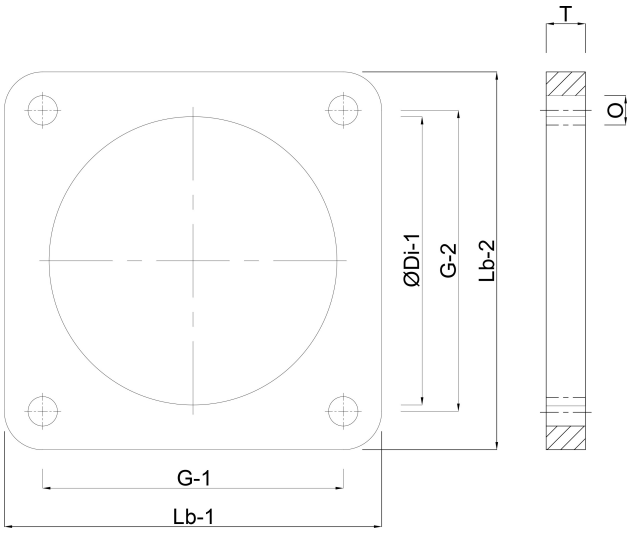

Last modified date: 31/10/2026

Bosta UK Ltd.
Reflection House
Olding Road
Bury St. Edmunds
Suffolk
IP33 3TA
T +44 (0) 1284 716580
E enquiries@bosta.co.uk
http://www.bosta.com