Profec Nr. 90 Elbow 90° stainless steel 316 1 1/4" female thread 16bar (0080011)



PROFEC

bosta
bringing water to life

TECHNICAL SPECIFICATIONS

Material	stainless steel 316
Connection	female thread
Fitting nr.	Nr. 90
Pressure	16 bar
Max. temp.	100 °C
Size	1 1/4"
WebshopURL	https://www.bosta.com/en-gb/profec-nr.-90-elbow-90-stainless-steel-316-1-1-4-female-thread-16bar-0080011

DIMENSIONS

Cb-1	40 mm
Cb-2	40 mm
ØDi-1	1 1/4 "
ØDi-2	1 1/4 "
ß	90 °

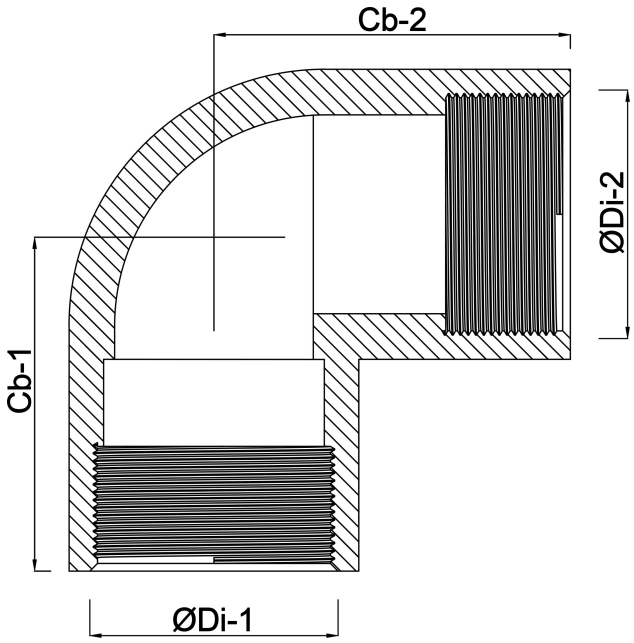

Last modified date: 30/10/2026

Bosta UK Ltd.
Reflection House
Olding Road
Bury St. Edmunds
Suffolk
IP33 3TA
T +44 (0) 1284 716580
E enquiries@bosta.co.uk
http://www.bosta.com

bosta
bringing water to life