Ball valve PVC-U 25 mm glue socket 16bar DN20 grey type AK (0161501)



bosta
bringing water to life

TECHNICAL SPECIFICATIONS

Colour	grey
Type	AK
Material	PVC-U
Operation	lever
Colour lever	red
Handle material	PVC-U
Housing construction	3-part
Material housing	PVC-U
Material seal	PE/EPDM
Connection	glue socket
Max. temperature	60 °C
Minimum medium temperature (continuous)	0 °C
Size	25 mm
WebshopURL	https://www.bosta.com/en-gb/ball-valve-pvc-u-25-mm-glue-socket-16bar-dn20-grey-type-ak-0161501
DN	20
Pressure	16 bar

DIMENSIONS

Ct-1	65 mm
Lb	111 mm
R	35 mm
ØDf	20 mm
ØDi-1	25 mm
ØDi-2	25 mm

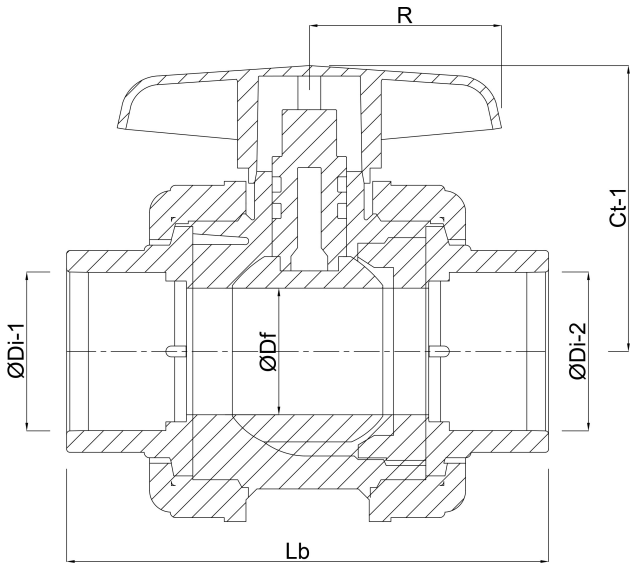

Last modified date: 31/10/2026

Bosta UK Ltd.
Reflection House
Olding Road
Bury St. Edmunds
Suffolk

IP33 3TA
T +44 (0) 1284 716580
E enquiries@bosta.co.uk
http://www.bosta.com

bosta
bringing water to life