3-way ball valve L-bore brass nickel plated 3/8" female thread 16bar DN10 type L-bore side connection (0401475)



bosta
bringing water to life

TECHNICAL SPECIFICATIONS

Type	L-bore
Material	brass
Surface treatment	nickel plated
Operation	lever
Colour lever	red
Handle material	aluminium
Ball material	hard chrome plated brass
Shaft	PVC
Material housing	brass
Material seal	PTFE
Ball bore	L-bore
Connection type	side connection
Connection	female thread
Flow	full
Temperature range	-30°C - 150°C
Pressure	16 bar
Size	3/8"

WebshopURL	https://www.bosta.com/en-gb/3-way-ball-valve-l-bore-brass-nickel-plated-3-8-female-thread-16bar-dn10-type-l-bore-side-connection-0401475
DN	10

DIMENSIONS

Ct-1	65 mm
F-1	18 mm
F-2	18 mm
Lb	77 mm
R	125 mm
ØDf	10 mm
ØDi-1	3/8 "
ØDi-2	3/8 "
ØDi-3	3/8 "

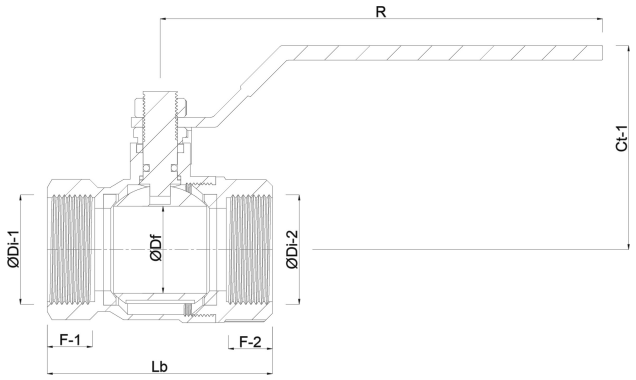

Last modified date: 31/10/2026

Bosta UK Ltd.
Reflection House
Olding Road
Bury St. Edmunds
Suffolk
IP33 3TA
T +44 (0) 1284 716580
E enquiries@bosta.co.uk
http://www.bosta.com

bosta
bringing water to life