Profec Reducer socket PVC-U 63 mm x 50 mm glue socket 16bar grey (0110669)



PROFEC

bosta
bringing water to life

TECHNICAL SPECIFICATIONS

Colour	grey
Material	PVC-U
Connection	glue socket
Pressure	16 bar
Size	63 mm x 50 mm
WebshopURL	https://www.bosta.com/en-gb/profec-reducer-socket-pvc-u-63-mm-x-50-mm-glue-socket-16bar-grey-0110669

DIMENSIONS

L	74 mm
ØDi-1	63 mm
ØDi-2	50 mm

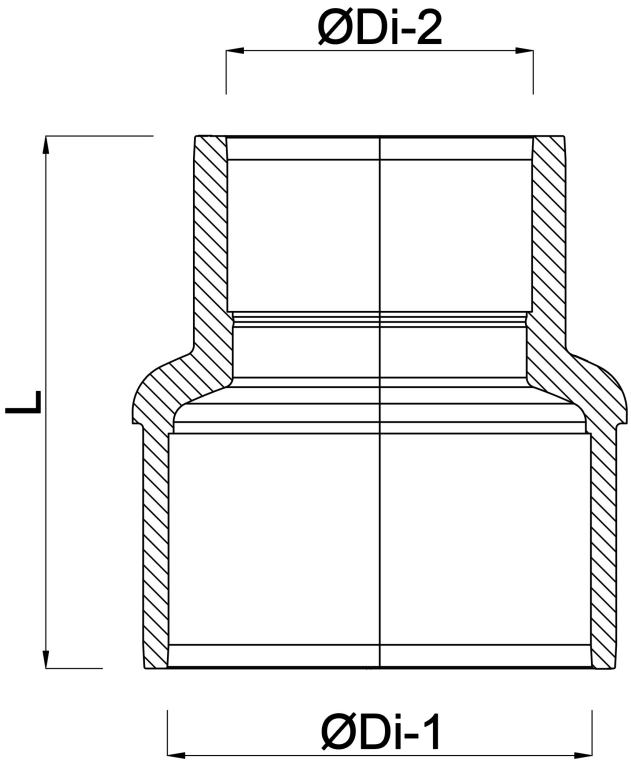

Last modified date: 30/10/2026

Bosta UK Ltd.
Reflection House
Olding Road
Bury St. Edmunds
Suffolk
IP33 3TA
T +44 (0) 1284 716580
E enquiries@bosta.co.uk
http://www.bosta.com

bosta
bringing water to life