Profec Long bend 90° PVC-U 40 mm glue socket 10bar grey type made from tubing (0110189)



PROFEC

bosta
bringing water to life

TECHNICAL SPECIFICATIONS

Colour	grey
Type	made from tubing
Material	PVC-U
Connection	glue socket
Size	40 mm
WebshopURL	https://www.bosta.com/en-gb/profec-long-bend-90-pvc-u-40-mm-glue-socket-10bar-grey-type-made-from-tubing-0110189
Pressure	10 bar

DIMENSIONS

Cb-1	107 mm
Cb-2	107 mm
Mold	hand formed
ØDi-1	40 mm
ØDi-2	40 mm
ß	90 °

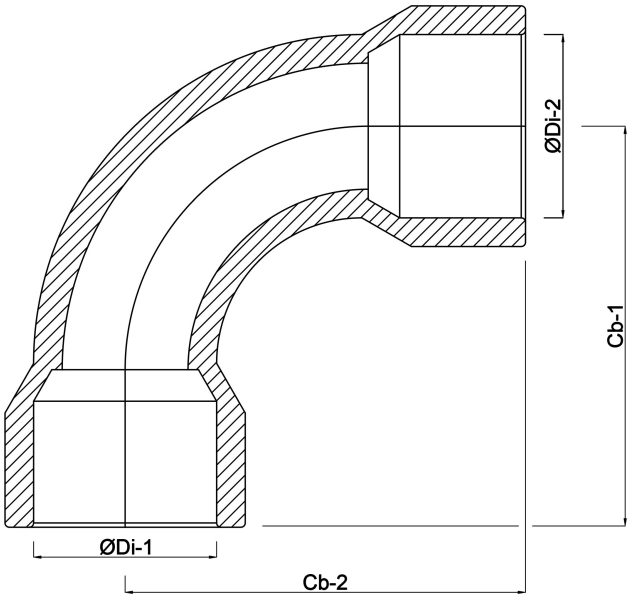

Last modified date: 30/10/2026

Bosta UK Ltd.
Reflection House
Olding Road
Bury St. Edmunds
Suffolk
IP33 3TA
T +44 (0) 1284 716580
E enquiries@bosta.co.uk
http://www.bosta.com