# 3-way ball valve T-bore PVC-U 50 mm glue socket 10bar DN40 grey type T-bore side connection (0111523)



bosta
bringing water to life

# TECHNICAL SPECIFICATIONS

| | |
|---|---|
| Colour | grey |
| Type | T-bore |
| Material | PVC-U |
| Operation | lever |
| Colour lever | red |
| Handle material | PVC-U |
| Material housing | PVC-U |
| Material seal | PTFE/EPDM |
| Ball bore | T-bore |
| Connection type | side connection |
| Connection | glue socket |
| Temperature range | 0°C - 60°C |
| Pressure | 10 bar |
| Shaft | PVC |
| Size | 50 mm |
| WebshopURL | https://www.bosta.com/en-gb/3-way-ball-valve-t-bore-pvc-u-50-mm-glue-socket-10bar-dn40-grey-type-t-bore-side-connection-0111523 |

| | |
|---|---|
| DN | 40 |

# DIMENSIONS

| | |
|---|---|
| Ct-1 | 94 mm |
| Lb | 207 mm |
| R | 128 mm |
| ØDf | 40 mm |
| ØDi-1 | 50 mm |
| ØDi-2 | 50 mm |

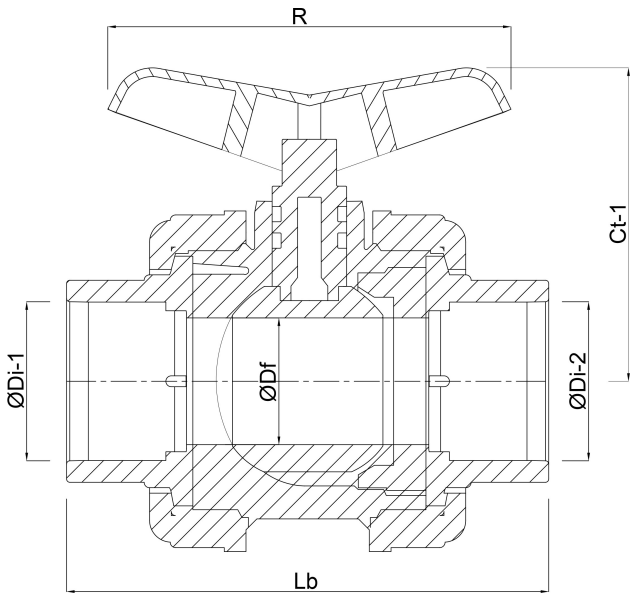


## Last modified date: 30/10/2026

Bosta UK Ltd.
Reflection House

Olding Road
Bury St. Edmunds
Suffolk
IP33 3TA
T +44 (0) 1284 716580
E enquiries@bosta.co.uk
http://www.bosta.com

bosta
bringing water to life