Profec Backing ring PVC-U 63 mm 16bar DN50 grey PN10/16 (0110923)



PROFEC

bosta
bringing water to life

TECHNICAL SPECIFICATIONS

Colour	grey
Material	PVC-U
Suitable for	0110903
Suitable for	
Size	63 mm
Bolt	M16x100
Packaging	50 pcs
WebshopURL	https://www.bosta.com/en-gb/profec-backing-ring-pvc-u-63-mm-16bar-dn50-grey-pn10-16-0110923
DN	50
Inner ø	78 mm
Flange	PN10/16
Outer ø	165 mm
Weight	0.297 kg
Thickness	18 mm
Pressure	16 bar
Bolt hole	18 mm

Holes	4

DIMENSIONS

Db	165 mm
O	18 mm
PCD	125 mm
ØDi-1	78 mm

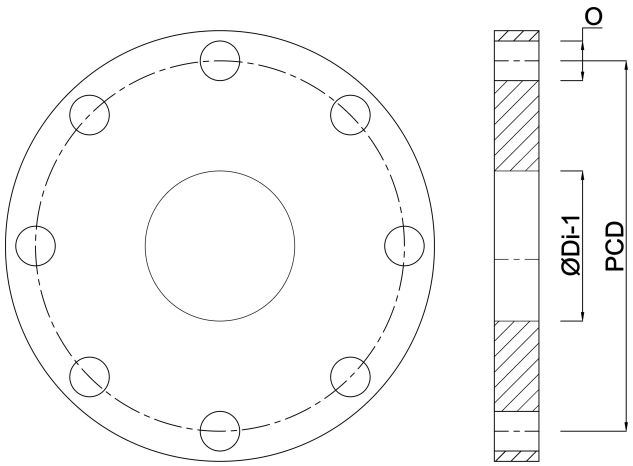

Last modified date: 30/10/2026

Bosta UK Ltd.
Reflection House
Olding Road
Bury St. Edmunds
Suffolk
IP33 3TA
T +44 (0) 1284 716580
E enquiries@bosta.co.uk
http://www.bosta.com