Profec Flange welding neck steel DN200 x 219,1 mm DIN flange x butt welding black PN16 (1180489)



PROFEC

bosta
bringing water to life

TECHNICAL SPECIFICATIONS

Colour	black
Material	steel
Connection	DIN flange x butt welding
DIN Standard	DIN 2633
Flange	PN16
Size	DN200 x 219,1 mm
WebshopURL	https://www.bosta.com/en-gb/profec-flange-welding-neck-steel-dn200-x-219-1-mm-din-flange-x-butt-welding-black-pn16-1180489
Outer ø	340 mm
Weight	10.85 kg
Height	62 mm
Thickness	24 mm
PCD	295 mm
Bolt hole	22 mm
Holes	12

DIMENSIONS

O	22 mm
PCD	295 mm
ØDi-1	207.3 mm

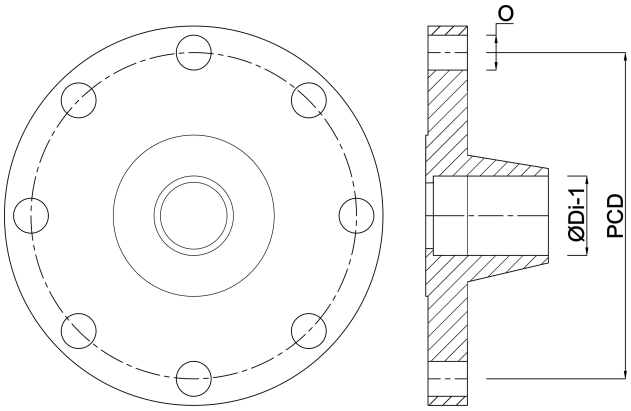

Last modified date: 01/11/2026

Bosta UK Ltd.
Reflection House
Olding Road
Bury St. Edmunds
Suffolk
IP33 3TA
T +44 (0) 1284 716580
E enquiries@bosta.co.uk
http://www.bosta.com

bosta
bringing water to life