Profec Swing check valve with lifting device ductile iron (GGG40) epoxy coating DN150 DIN flange 16bar DN150 blue PN 10/16 (0402639)



PROFEC

bosta
bringing water to life

TECHNICAL SPECIFICATIONS

Colour	blue
Material	ductile iron (GGG40)
Surface treatment	epoxy coating
Material cover	ductile iron
Material housing	ductile iron (GGG40)
Material seal	NBR
Connection	DIN flange
Gasket	NBR
Temperature range	0°C - 80°C
Pressure	16 bar
Capacity	382 m^3/h
Size	DN150
WebshopURL	https://www.bosta.com/en-gb/profec-swing-check-valve-with-lifting-device-ductile-iron-ggg40-epoxy-coating-dn150-din-flange-16bar-dn150-blue-pn-10-16-0402639
Length	400 mm
DN	150
Flange	PN 10/16

Outer ø	285 mm
PCD	240 mm
Holes	8

DIMENSIONS

Ct-1	143 mm
L	400 mm
PCD	240 mm

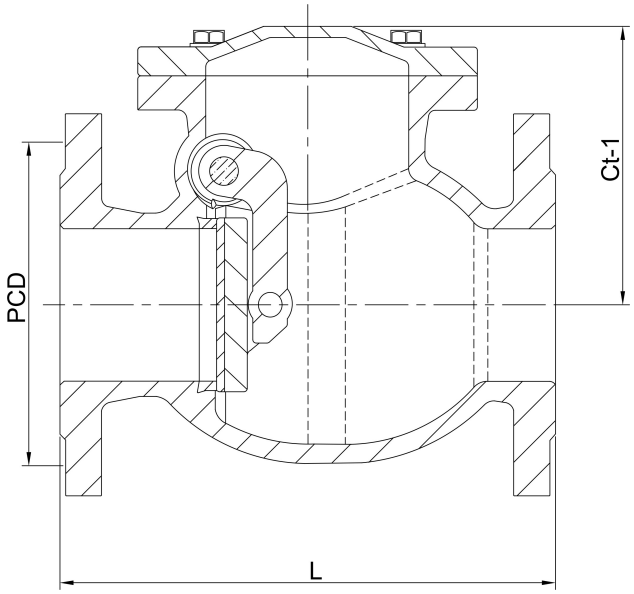

Last modified date: 31/10/2026

Bosta UK Ltd.
Reflection House
Olding Road
Bury St. Edmunds

bosta
bringing water to life

Suffolk
IP33 3TA
T +44 (0) 1284 716580
E enquiries@bosta.co.uk
http://www.bosta.com

bosta
bringing water to life