Profec Union coupler PVC-U 3/4" female thread 10bar grey (0100112)



PROFEC

bosta
bringing water to life

TECHNICAL SPECIFICATIONS

Colour	grey
Material	PVC-U
Connection	female thread
Pressure	10 bar
Size	3/4"
WebshopURL	https://www.bosta.com/en-gb/profec-union-coupler-pvc-u-3-4-female-thread-10bar-grey-0100112

DIMENSIONS

Do-n	51 mm
Hi-1	23 mm
L	52 mm
Lb	29 mm
ØDi-1	3/4 "
ØDi-2	3/4 "

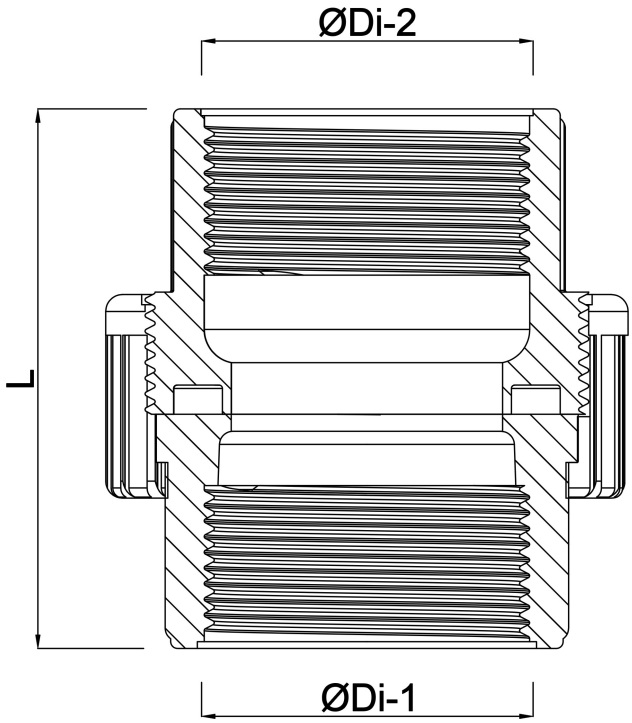

Last modified date: 30/10/2026

Bosta UK Ltd.
Reflection House
Olding Road
Bury St. Edmunds
Suffolk
IP33 3TA
T +44 (0) 1284 716580
E enquiries@bosta.co.uk
http://www.bosta.com

bosta
bringing water to life