Profec Ball valve single union PVC-U 3/4" female thread 10bar DN20 grey type Safe 550 (0112151)



PROFEC

bosta
bringing water to life

TECHNICAL SPECIFICATIONS

Colour	grey
Type	Safe 550
Material	PVC-U
Operation	lever
Colour lever	red
Handle material	PVC-U
Housing construction	2-part
Material housing	PVC-U
Material seal	hytrel/EPDM
Connection	female thread
Max. temperature	60 °C
Minimum medium temperature (continuous)	0 °C
Pressure	10 bar
Size	3/4"
WebshopURL	https://www.bosta.com/en-gb/profec-ball-valve-single-union-pvc-u-3-4-female-thread-10bar-dn20-grey-type-safe-550-0112151

DN	20

DIMENSIONS

Ct-1	71 mm
Lb	84 mm
R	54 mm
ØDf	25 mm
ØDi-1	3/4 "
ØDi-2	3/4 "

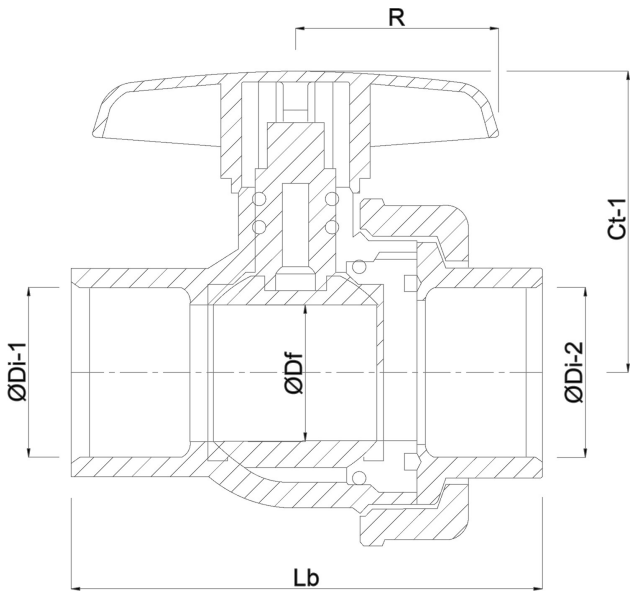

PRODUCT INFORMATION

With secure ball.

Last modified date: 31/10/2026

Bosta UK Ltd.
Reflection House
Olding Road
Bury St. Edmunds
Suffolk
IP33 3TA
T +44 (0) 1284 716580
E enquiries@bosta.co.uk
http://www.bosta.com