Profec Backing ring PVC-U 400 mm 6bar DN375 grey PN10 (0110971)



PROFEC

bosta
bringing water to life

TECHNICAL SPECIFICATIONS

Colour	grey
Material	PVC-U
Suitable for	0110915
Suitable for	
Size	400 mm
Bolt	M20x180
Packaging	1 pcs
WebshopURL	https://www.bosta.com/en-gb/profec-backing-ring-pvc-u-400-mm-6bar-dn375-grey-pn10-0110971
DN	375
Inner ø	438 mm
Flange	PN10
Outer ø	565 mm
Weight	3.98 kg
Thickness	42 mm
Pressure	6 bar
Bolt hole	26 mm

Holes	16

DIMENSIONS

Db	565 mm
O	26 mm
PCD	515 mm
ØDi-1	438 mm

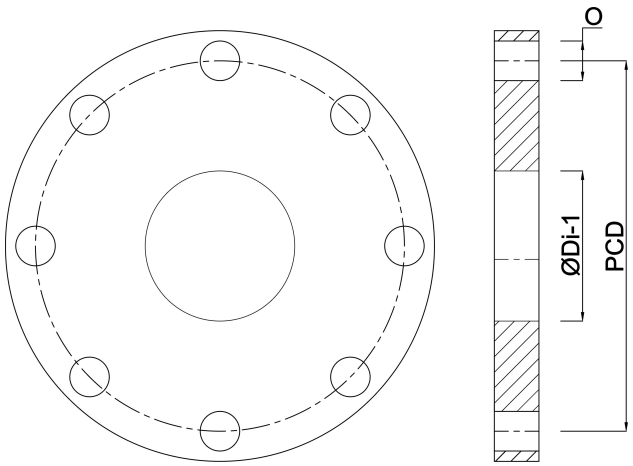

Last modified date: 30/10/2026

Bosta UK Ltd.
Reflection House
Olding Road
Bury St. Edmunds
Suffolk
IP33 3TA
T +44 (0) 1284 716580
E enquiries@bosta.co.uk
http://www.bosta.com