Ball valve PVC-U 75 mm glue socket 10bar DN65 grey type AK (0161506)



bosta
bringing water to life

TECHNICAL SPECIFICATIONS

Colour	grey
Type	AK
Material	PVC-U
Operation	lever
Colour lever	red
Handle material	PVC-U
Housing construction	3-part
Material housing	PVC-U
Material seal	PE/EPDM
Connection	glue socket
Max. temperature	60 °C
Minimum medium temperature (continuous)	0 °C
Size	75 mm
WebshopURL	https://www.bosta.com/en-gb/ball-valve-pvc-u-75-mm-glue-socket-10bar-dn65-grey-type-ak-0161506
DN	65
Pressure	10 bar

DIMENSIONS

Ct-1	184 mm
Lb	238 mm
R	100 mm
ØDf	65 mm
ØDi-1	75 mm
ØDi-2	75 mm

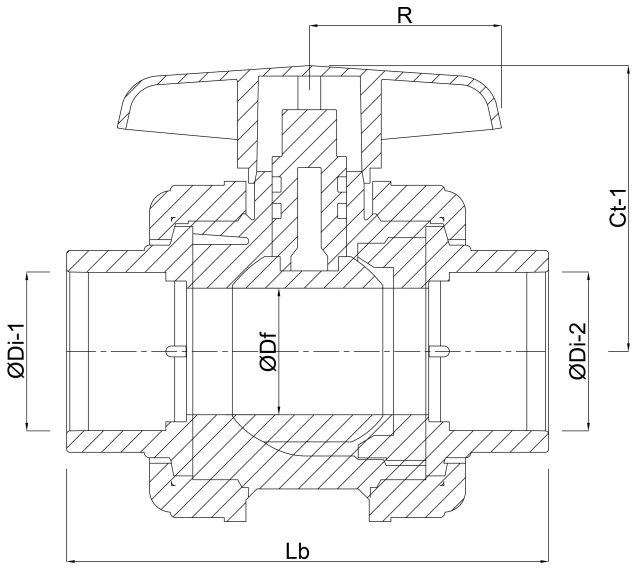

Last modified date: 31/10/2026

Bosta UK Ltd.
Reflection House
Olding Road
Bury St. Edmunds
Suffolk

IP33 3TA
T +44 (0) 1284 716580
E enquiries@bosta.co.uk
http://www.bosta.com

bosta
bringing water to life