VDL Hose tail 2/3 union adaptor PVC-U 2" x 40 mm female thread x hose tail grey (0110994)



Van de Lande

bosta
bringing water to life

TECHNICAL SPECIFICATIONS

Colour	grey
Material	PVC-U
Connection	female thread x hose tail
Size	2" x 40 mm
WebshopURL	https://www.bosta.com/en-gb/vdl-hose-tail-2-3-union-adaptor-pvc-u-2-x-40-mm-female-thread-x-hose-tail-grey-0110994

DIMENSIONS

F-1	15 mm
L	72 mm
L	107 mm
Lb	107 mm
Lq-2	72 mm
ØDi-1	2 "
ØDo-2	40 mm

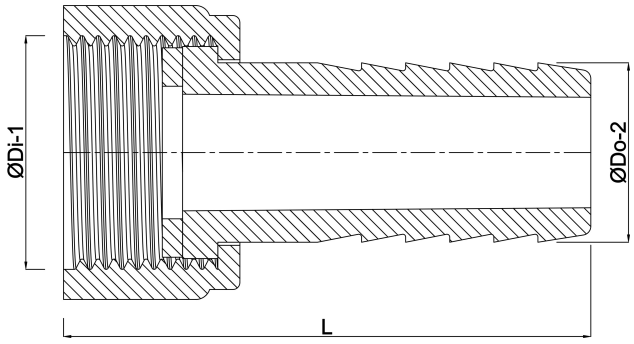

Last modified date: 01/11/2026

Bosta UK Ltd.
Reflection House
Olding Road
Bury St. Edmunds
Suffolk
IP33 3TA
T +44 (0) 1284 716580
E enquiries@bosta.co.uk
http://www.bosta.com