Profec Ball valve single union PVC-U 2" female thread 10bar DN50 grey type Safe 550 (0112155)



PROFEC

bosta
bringing water to life

TECHNICAL SPECIFICATIONS

Colour	grey
Type	Safe 550
Material	PVC-U
Operation	lever
Colour lever	red
Handle material	PVC-U
Housing construction	2-part
Material housing	PVC-U
Material seal	hytrel/EPDM
Connection	female thread
Max. temperature	60 °C
Minimum medium temperature (continuous)	0 °C
Pressure	10 bar
Size	2"
WebshopURL	https://www.bosta.com/en-gb/profec-ball-valve-single-union-pvc-u-2-female-thread-10bar-dn50-grey-type-safe-550-0112155

DN	50

DIMENSIONS

Ct-1	107 mm
Lb	143 mm
R	74 mm
ØDf	50 mm
ØDi-1	2 "
ØDi-2	2 "

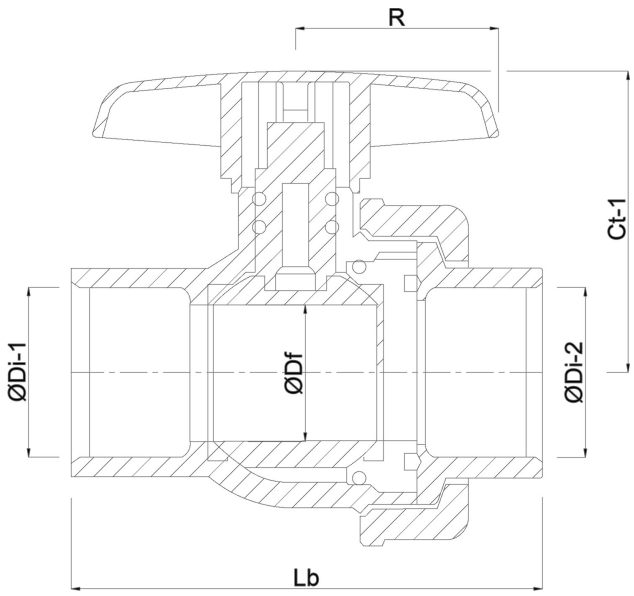

PRODUCT INFORMATION

With secure ball.

Last modified date: 31/10/2026

Bosta UK Ltd.
Reflection House
Olding Road
Bury St. Edmunds
Suffolk
IP33 3TA
T +44 (0) 1284 716580
E enquiries@bosta.co.uk
http://www.bosta.com