Profec Adaptor socket PVC-U 75/90 mm x 3" glue socket/glue spigot x female thread 10bar grey (0101378)



PROFEC

bosta
bringing water to life

TECHNICAL SPECIFICATIONS

Colour	grey
Material	PVC-U
Connection	glue socket/glue spigot x female thread
Pressure	10 bar
Size	75/90 mm x 3"
WebshopURL	https://www.bosta.com/en-gb/profec-adaptor-socket-pvc-u-75-90-mm-x-3-glue-socket-glue-spigot-x-female-thread-10bar-grey-0101378

DIMENSIONS

F-2	36 mm
L	98 mm
P-1	44 mm
ØDi-1	3 "
ØDi-2	75 mm
ØDo-3	90 mm

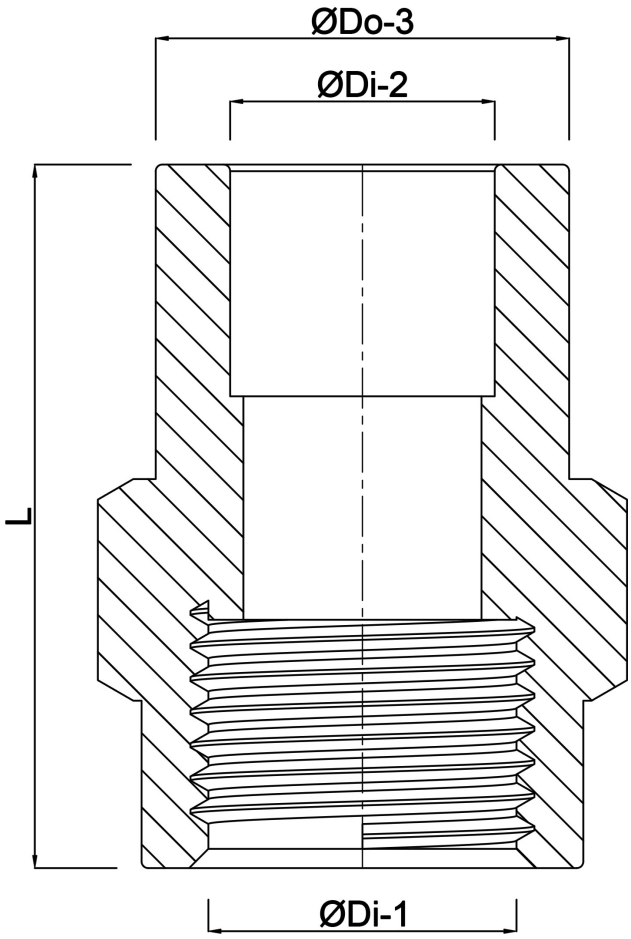

Last modified date: 30/10/2026

Bosta UK Ltd.
Reflection House
Olding Road
Bury St. Edmunds
Suffolk
IP33 3TA
T +44 (0) 1284 716580
E enquiries@bosta.co.uk
http://www.bosta.com

bosta
bringing water to life