Profec Blind flange PVC-U DN100 x 110 mm DIN flange 16bar DN100 grey PN10/16 (0111027)



PROFEC

bosta
bringing water to life

TECHNICAL SPECIFICATIONS

Colour	grey
Material	PVC-U
Connection	DIN flange
Size	DN100 x 110 mm
Bolt	M16
Packaging	18 pcs
WebshopURL	https://www.bosta.com/en-gb/profec-blind-flange-pvc-u-dn100-x-110-mm-din-flange-16bar-dn100-grey-pn10-16-0111027
DN	100
Flange	PN10/16
Outer ø	220 mm
Weight	0.766 kg
Length bolt	100 mm
Thickness	22 mm
Pressure	16 bar
Bolt hole	18 mm
Holes	8

DIMENSIONS

O	18 mm
PCD	180 mm

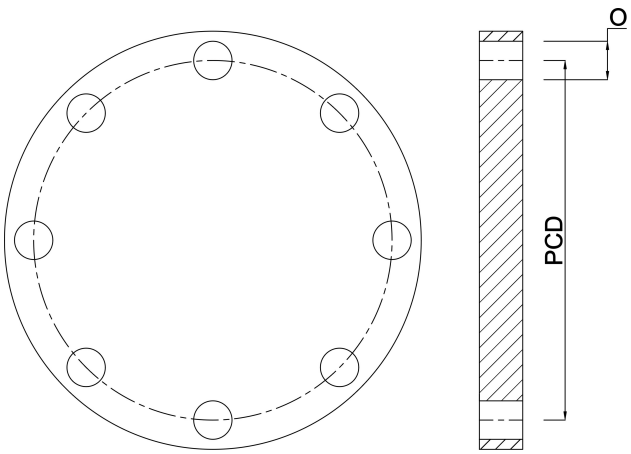

PRODUCT INFORMATION

For PCD, bolt hole size and number see Technical specifications "How to identify a flange" at the back of the catalogue (PCD equals K)

Last modified date: 30/10/2026

Bosta UK Ltd.
Reflection House
Olding Road
Bury St. Edmunds
Suffolk
IP33 3TA
T +44 (0) 1284 716580
E enquiries@bosta.co.uk
http://www.bosta.com