VDL Ball valve PVC-U 16 mm glue socket 16bar grey type DIL (0100842)



Van de Lande

bosta
bringing water to life

TECHNICAL SPECIFICATIONS

Colour	grey
Type	DIL
Material	PVC-U
Operation	lever
Colour lever	orange
Handle material	PVC-U
Housing construction	3-part
Material seal	EPDM
Connection	glue socket
Temperature range	0°C - 60°C
Size	16 mm
WebshopURL	https://www.bosta.com/en-gb/vdl-ball-valve-pvc-u-16-mm-glue-socket-16bar-grey-type-dil-0100842
Pressure	16 bar

DIMENSIONS

Ct-1	56 mm

Lb	84 mm
R	82 mm
ØDf	15 mm
ØDi-1	16 mm
ØDi-2	16 mm

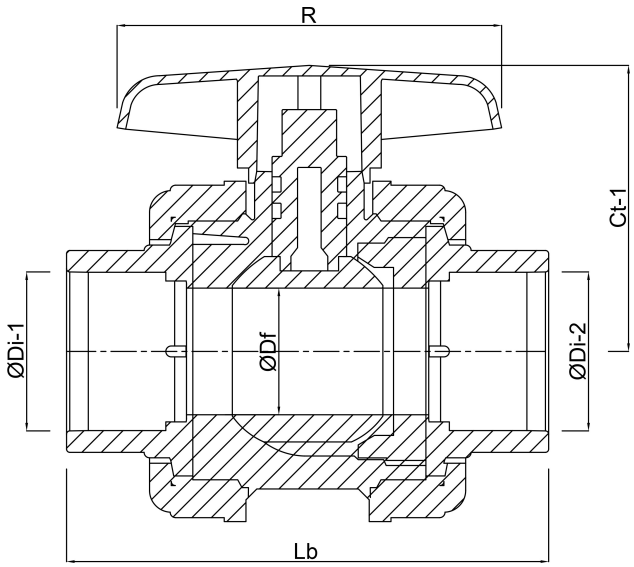

Last modified date: 01/11/2026

Bosta UK Ltd.
Reflection House
Olding Road
Bury St. Edmunds
Suffolk
IP33 3TA
T +44 (0) 1284 716580
E enquiries@bosta.co.uk
http://www.bosta.com