Backing ring PP/steel PP 110 mm SDR11 16bar DN100 black PN10/16 (0101936)



bosta
bringing water to life

TECHNICAL SPECIFICATIONS

Colour	black
Material	PP/steel
Surface treatment	PP
Class	SDR11
Pressure	16 bar
Size	110 mm
WebshopURL	https://www.bosta.com/en-gb/backing-ring-pp-steel-pp-110-mm-sdr11-16bar-dn100-black-pn10-16-0101936
DN	100
Flange	PN10/16
Outer ø	220 mm
Weight	1.331 kg
Thickness	20 mm
Bolt hole	18 mm
Holes	8

DIMENSIONS

O	18 mm
PCD	180 mm
ØDi-1	128 mm

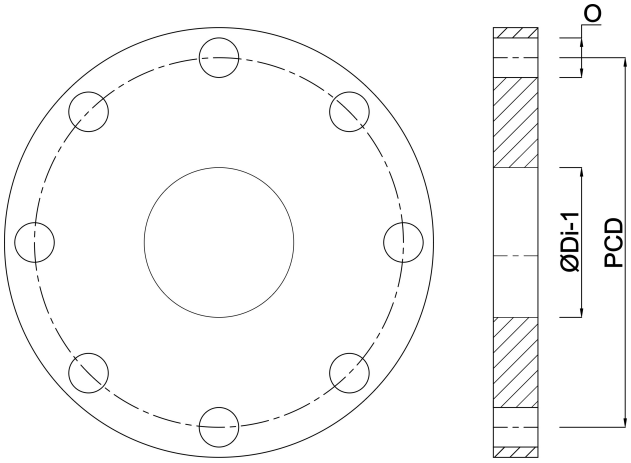

Last modified date: 30/10/2026

Bosta UK Ltd.
Reflection House
Olding Road
Bury St. Edmunds
Suffolk
IP33 3TA
T +44 (0) 1284 716580
E enquiries@bosta.co.uk
http://www.bosta.com