# VDL Union coupler PVC-U 50 mm glue socket 16bar grey type A (7002848)



Van de Lande

bosta
bringing water to life

# TECHNICAL SPECIFICATIONS

| | |
|---|---|
| Colour | grey |
| Type | A |
| Material | PVC-U |
| Material seal | EPDM |
| Connection | glue socket |
| Size | 50 mm |
| WebshopURL | https://www.bosta.com/en-gb/vdl-union-coupler-pvc-u-50-mm-glue-socket-16bar-grey-type-a-7002848 |
| Pressure | 16 bar |

# DIMENSIONS

| | |
|---|---|
| K-2 | 64 mm |
| L | 85 mm |
| ØDi-1 | 50 mm |
| ØDi-2 | 50 mm |

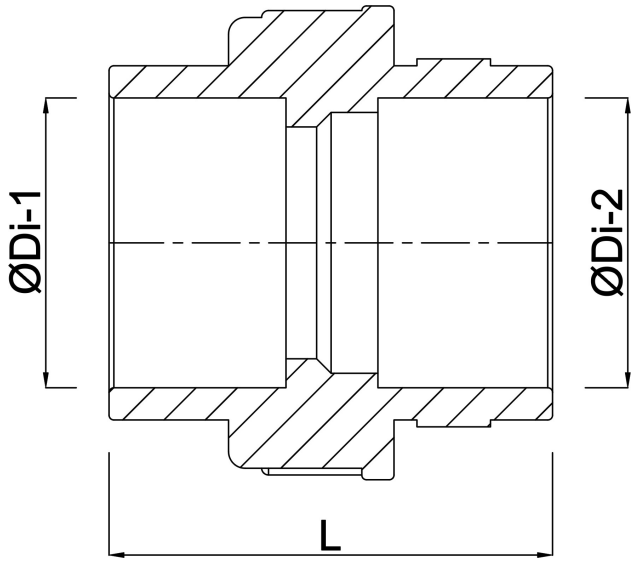


## Last modified date: 01/11/2026

Bosta UK Ltd.
Reflection House
Olding Road
Bury St. Edmunds
Suffolk
IP33 3TA
T +44 (0) 1284 716580
E enquiries@bosta.co.uk
http://www.bosta.com

bosta
bringing water to life