Profec Backing ring PVC-U 280 mm 10bar DN250 grey PN10 (0110970)



PROFEC

bosta
bringing water to life

TECHNICAL SPECIFICATIONS

Colour	grey
Material	PVC-U
Suitable for	0110914
Suitable for	
Size	280 mm
Bolt	M20x160
Packaging	1 pcs
WebshopURL	https://www.bosta.com/en-gb/profec-backing-ring-pvc-u-280-mm-10bar-dn250-grey-pn10-0110970
DN	250
Inner ø	309 mm
Flange	PN10
Outer ø	396 mm
Weight	1.88 kg
Thickness	35 mm
Pressure	10 bar
Bolt hole	22 mm

Holes	12

DIMENSIONS

Db	396 mm
O	22 mm
PCD	350 mm
ØDi-1	309 mm

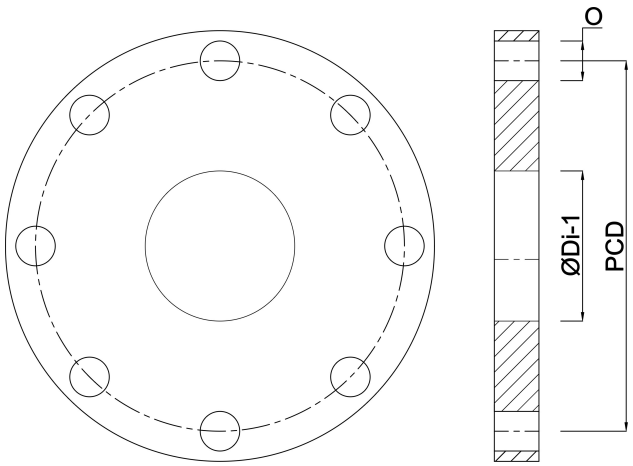

Last modified date: 30/10/2026

Bosta UK Ltd.
Reflection House
Olding Road
Bury St. Edmunds
Suffolk
IP33 3TA
T +44 (0) 1284 716580
E enquiries@bosta.co.uk
http://www.bosta.com