VDL Union coupler PVC-U 50 mm x 50/63 mm glue socket x glue socket/glue spigot 16bar grey (0110024)



Van de Lande

bosta
bringing water to life

TECHNICAL SPECIFICATIONS

Colour	grey
Material	PVC-U
Material seal	EPDM
Connection	glue socket x glue socket/glue spigot
Size	50 mm x 50/63 mm
WebshopURL	https://www.bosta.com/en-gb/vdl-union-coupler-pvc-u-50-mm-x-50-63-mm-glue-socket-x-glue-socket-glue-spigot-16bar-grey-0110024
Pressure	16 bar

DIMENSIONS

L	163 mm
Mold	hand formed
P-1	41 mm
P-2	33 mm
ØDi-1	50 mm
ØDi-2	63 mm

ØDo-1	2 "
ØDo-3	50 mm

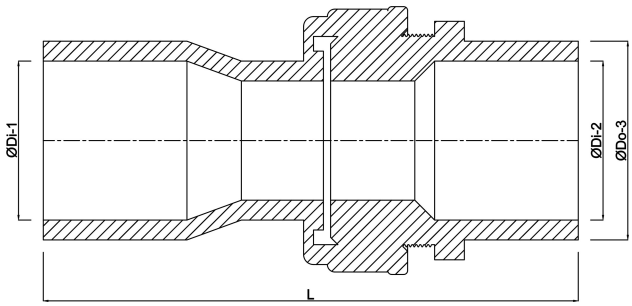

Last modified date: 30/10/2026

Bosta UK Ltd.
Reflection House
Olding Road
Bury St. Edmunds
Suffolk
IP33 3TA
T +44 (0) 1284 716580
E enquiries@bosta.co.uk
http://www.bosta.com