# Profec Ball valve brass nickel plated 1" female thread x male thread 25bar type 104 (0403019)

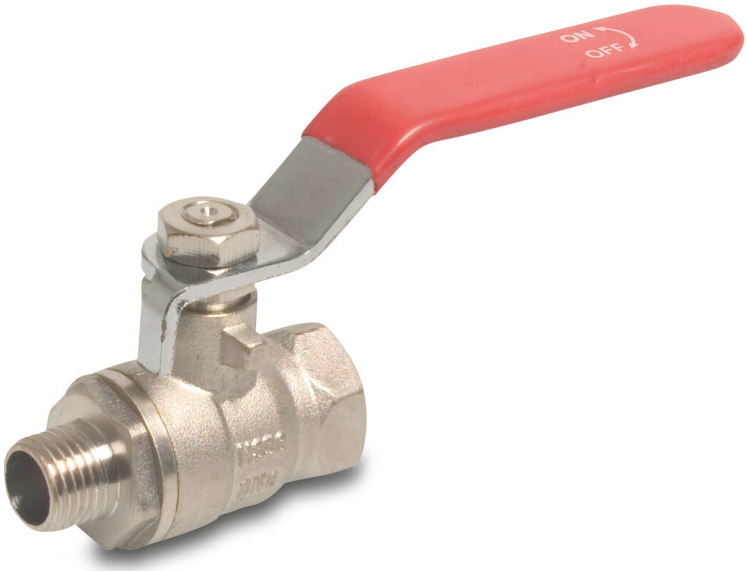


PROFEC

bosta
bringing water to life

# TECHNICAL SPECIFICATIONS

| | |
|---|---|
| Type | 104 |
| Material | brass |
| Surface treatment | nickel plated |
| Operation | lever |
| Colour lever | red |
| Handle material | steel |
| Ball material | hard chrome plated brass |
| Material housing | brass |
| Material seal | PTFE |
| Connection | female thread x male thread |
| Temperature range | -20°C - 120°C |
| Pressure | 25 bar |
| Size | 1" |
| WebshopURL | https://www.bosta.com/en-gb/profec-ball-valve-brass-nickel-plated-1-female-thread-x-male-thread-25bar-type-104-0403019 |

# DIMENSIONS

| | |
|---|---|
| Ct-1 | 56.9 mm |
| F-1 | 14 mm |
| F-2 | 14 mm |
| Lb | 70,8 mm |
| R | 126.3 mm |
| ØDf | 24 mm |
| ØDi-2 | 1 " |
| ØDo-1 | 1 " |

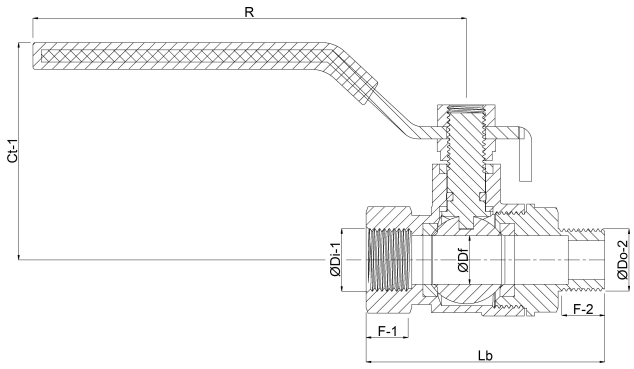


## Last modified date: 31/10/2026

Bosta UK Ltd.
Reflection House
Olding Road
Bury St. Edmunds
Suffolk

bosta
bringing water to life

IP33 3TA
T +44 (0) 1284 716580
E enquiries@bosta.co.uk
http://www.bosta.com

bosta
bringing water to life