Blind flange stainless steel 316
DN125 DIN flange 16bar
DN125 PN16 (0080661)



bosta
bringing water to life

TECHNICAL SPECIFICATIONS

Material	stainless steel 316
Connection	DIN flange
DIN Standard	DIN 2527
Flange	PN16
Pressure	16 bar
Size	DN125
WebshopURL	https://www.bosta.com/en-gb/blind-flange-stainless-steel-316-dn125-din-flange-16bar-dn125-pn16-0080661
DN	125
Outer ø	250 mm
Weight	8.1 kg
Thickness	22 mm
Bolt hole	18 mm
Holes	8

DIMENSIONS

O	18 mm

PCD	210 mm

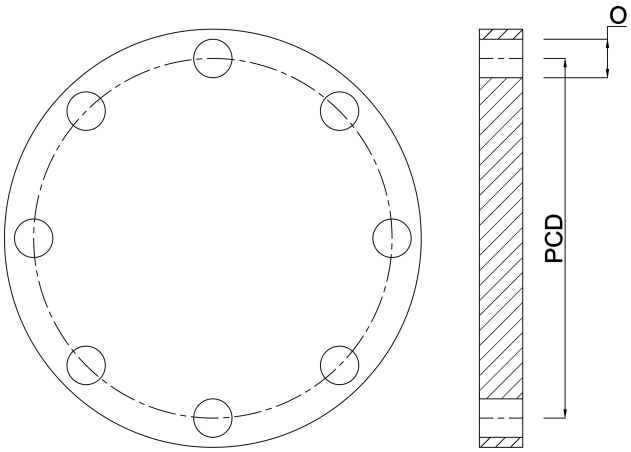

Last modified date: 30/10/2026

Bosta UK Ltd.
Reflection House
Olding Road
Bury St. Edmunds
Suffolk
IP33 3TA
T +44 (0) 1284 716580
E enquiries@bosta.co.uk
http://www.bosta.com