3-way ball valve L-bore PVC-U 32 mm glue socket 10bar DN25 grey type L-bore side connection (0111643)



bosta
bringing water to life

TECHNICAL SPECIFICATIONS

Colour	grey
Type	L-bore
Material	PVC-U
Operation	lever
Colour lever	red
Handle material	PVC-U
Material housing	PVC-U
Material seal	PTFE/EPDM
Ball bore	L-bore
Connection type	side connection
Connection	glue socket
Temperature range	0°C - 60°C
Pressure	10 bar
Size	32 mm
WebshopURL	https://www.bosta.com/en-gb/3-way-ball-valve-l-bore-pvc-u-32-mm-glue-socket-10bar-dn25-grey-type-l-bore-side-connection-0111643
DN	25

DIMENSIONS

Ct-1	54 mm
Lb	147 mm
R	100 mm
ØDf	25 mm
ØDi-1	32 mm
ØDi-2	32 mm

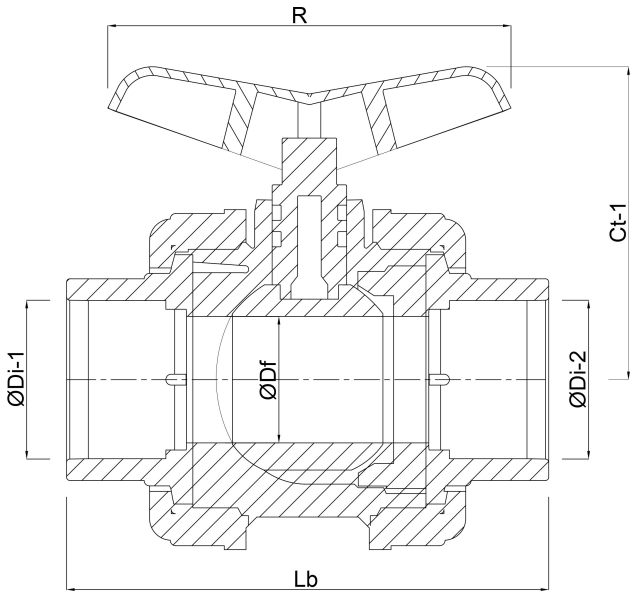

Last modified date: 31/10/2026

Bosta UK Ltd.
Reflection House
Olding Road
Bury St. Edmunds

Suffolk
IP33 3TA
T +44 (0) 1284 716580
E enquiries@bosta.co.uk
http://www.bosta.com

bosta
bringing water to life