Backing ring PP/steel PP 355 mm SDR11 16bar DN350 black PN10 (7031734)



bosta
bringing water to life

TECHNICAL SPECIFICATIONS

Colour	black
Material	PP/steel
Surface treatment	PP
Class	SDR11
Pressure	16 bar
Size	355 mm
WebshopURL	https://www.bosta.com/en-gb/backing-ring-pp-steel-pp-355-mm-sdr11-16bar-dn350-black-pn10-7031734
DN	350
Flange	PN10
Outer ø	515 mm
Weight	14.6 kg
Thickness	42 mm
Bolt hole	22.5 mm
Holes	6

DIMENSIONS

O	22.5 mm
PCD	460 mm
ØDi-1	376 mm

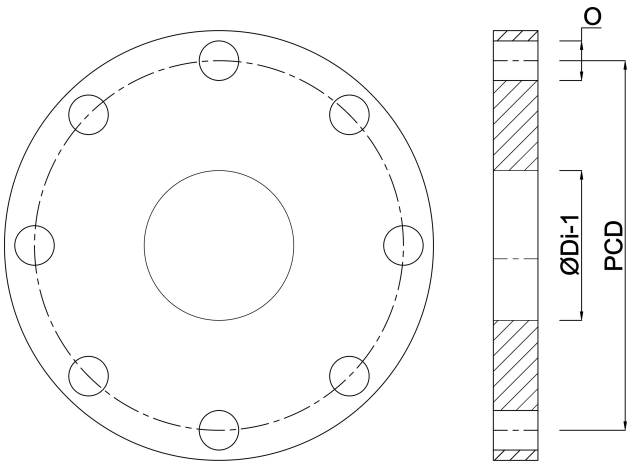

Last modified date: 30/10/2026

Bosta UK Ltd.
Reflection House
Olding Road
Bury St. Edmunds
Suffolk
IP33 3TA
T +44 (0) 1284 716580
E enquiries@bosta.co.uk
http://www.bosta.com