Profec Nr. 90 Elbow 90° stainless steel 316 3" female thread 16bar (0080331)



PROFEC

bosta
bringing water to life

TECHNICAL SPECIFICATIONS

Material	stainless steel 316
Connection	female thread
Fitting nr.	Nr. 90
Pressure	16 bar
Max. temp.	100 °C
Size	3"
WebshopURL	https://www.bosta.com/en-gb/profec-nr.-90-elbow-90-stainless-steel-316-3-female-thread-16bar-0080331

DIMENSIONS

Cb-1	74 mm
Cb-2	74 mm
ØDi-1	3 "
ØDi-2	3 "
ß	90 °

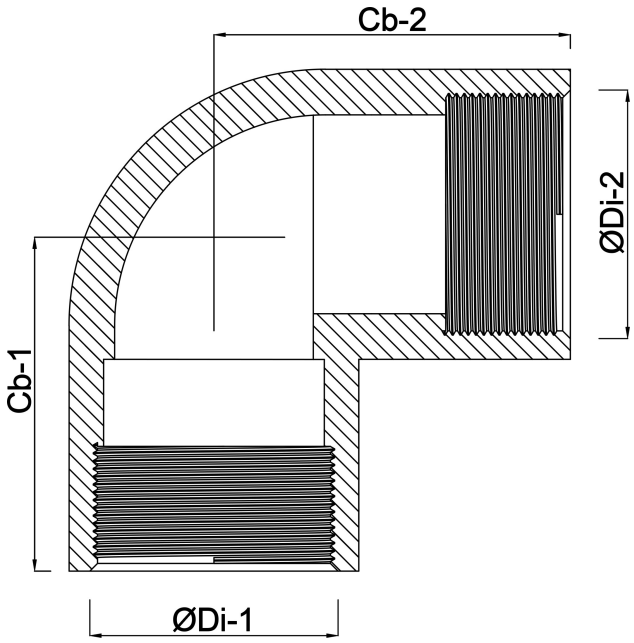

Last modified date: 30/10/2026

Bosta UK Ltd.
Reflection House
Olding Road
Bury St. Edmunds
Suffolk
IP33 3TA
T +44 (0) 1284 716580
E enquiries@bosta.co.uk
http://www.bosta.com

bosta
bringing water to life