Ball valve PVC-U 110 mm glue socket 10bar DN80 grey type 2000 Teflon (0111914)



bosta
bringing water to life

TECHNICAL SPECIFICATIONS

Colour	grey
Type	2000 Teflon
Material	PVC-U
Operation	lever
Colour lever	red
Handle material	PVC-U
Housing construction	3-part
Material housing	PVC-U
Material seal	PTFE/EPDM
Connection	glue socket
Temperature range	0°C - 60°C
Pressure	10 bar
Size	110 mm
Type	
WebshopURL	https://www.bosta.com/en-gb/ball-valve-pvc-u-110-mm-glue-socket-10bar-dn80-grey-type-2000-teflon-0111914
Length	275 mm

DN	80

DIMENSIONS

Ct-1	165 mm
Lb	275 mm
R	215 mm
ØDf	80 mm
ØDi-1	110 mm
ØDi-2	110 mm

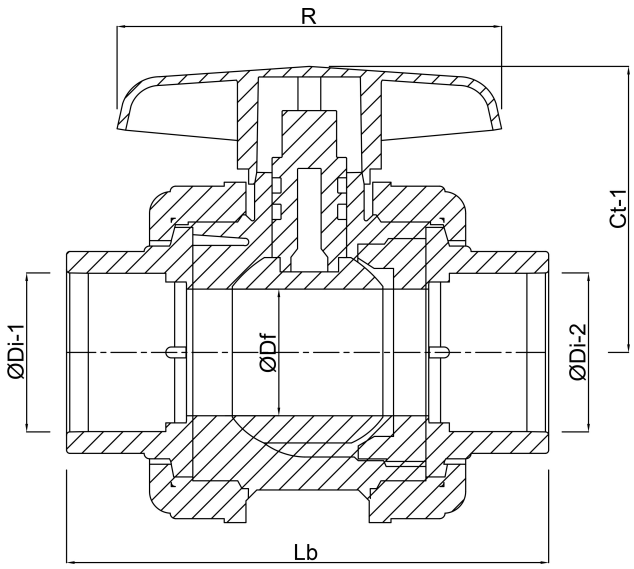

Last modified date: 31/10/2026

Bosta UK Ltd.
Reflection House

Olding Road
Bury St. Edmunds
Suffolk
IP33 3TA
T +44 (0) 1284 716580
E enquiries@bosta.co.uk
http://www.bosta.com

bosta
bringing water to life