# Profec Ball valve single union PVC-U 1" female thread 10bar DN25 grey type Safe 550 (0112152)



PROFEC

bosta
bringing water to life

# TECHNICAL SPECIFICATIONS

| | |
|---|---|
| Colour | grey |
| Type | Safe 550 |
| Material | PVC-U |
| Operation | lever |
| Colour lever | red |
| Handle material | PVC-U |
| Housing construction | 2-part |
| Material housing | PVC-U |
| Material seal | hytrel/EPDM |
| Connection | female thread |
| Max. temperature | 60 °C |
| Minimum medium temperature (continuous) | 0 °C |
| Pressure | 10 bar |
| Size | 1" |
| WebshopURL | https://www.bosta.com/en-gb/profec-ball-valve-single-union-pvc-u-1-female-thread-10bar-dn25-grey-type-safe-550-0112152 |

| | |
|---|---|
| DN | 25 |

# DIMENSIONS

| | |
|---|---|
| Ct-1 | 71 mm |
| Lb | 92 mm |
| R | 54 mm |
| ØDf | 25 mm |
| ØDi-1 | 1 " |
| ØDi-2 | 1 " |

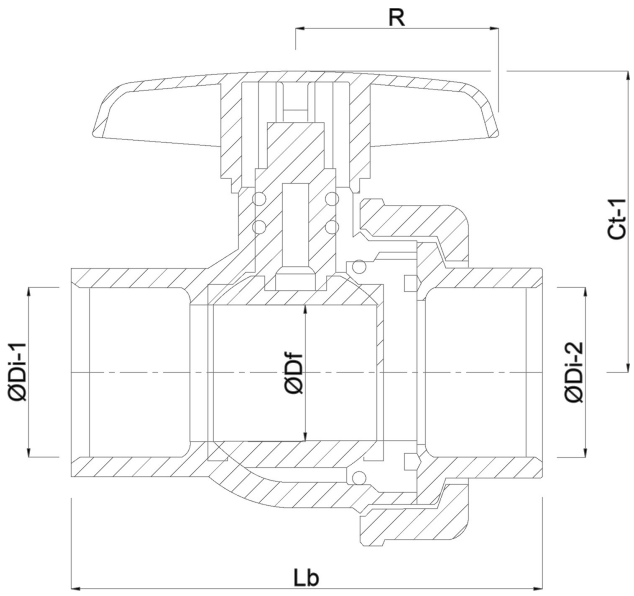


# PRODUCT INFORMATION

With secure ball.

## Last modified date: 31/10/2026

Bosta UK Ltd.
Reflection House
Olding Road
Bury St. Edmunds
Suffolk
IP33 3TA
T +44 (0) 1284 716580
E enquiries@bosta.co.uk
http://www.bosta.com