Hose tail 2/3 union adaptor PP 3/4" x 10 mm female threaded nut x hose tail 6bar grey (0330227)



bosta
bringing water to life

TECHNICAL SPECIFICATIONS

Colour	grey
Material	PP
Material seal	EPDM
Connection	female threaded nut x hose tail
Pressure	6 bar
Max. temp.	80 °C
Size	3/4" x 10 mm
WebshopURL	https://www.bosta.com/en-gb/hose-tail-2-3-union-adaptor-pp-3-4-x-10-mm-female-threaded-nut-x-hose-tail-6bar-grey-0330227

DIMENSIONS

L	47 mm
Lq-2	22 mm
ØDi-1	3/4 "
ØDo-2	10 mm

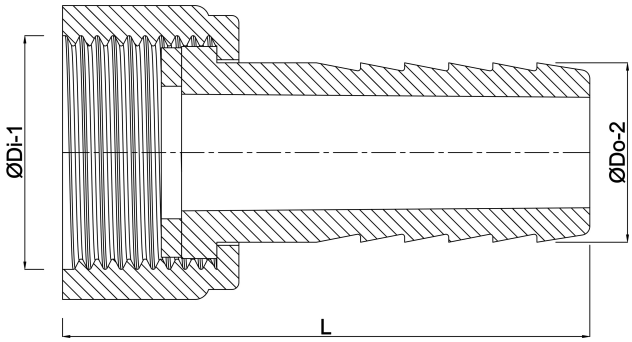

Last modified date: 31/10/2026

Bosta UK Ltd.
Reflection House
Olding Road
Bury St. Edmunds
Suffolk
IP33 3TA
T +44 (0) 1284 716580
E enquiries@bosta.co.uk
http://www.bosta.com