Backing ring PP/steel PP 63 mm SDR11 16bar DN50 black PN10/16 (0101933)



bosta
bringing water to life

TECHNICAL SPECIFICATIONS

Colour	black
Material	PP/steel
Surface treatment	PP
Class	SDR11
Pressure	16 bar
Size	63 mm
WebshopURL	https://www.bosta.com/en-gb/backing-ring-pp-steel-pp-63-mm-sdr11-16bar-dn50-black-pn10-16-0101933
DN	50
Flange	PN10/16
Outer ø	165 mm
Weight	0.789 kg
Thickness	18 mm
Bolt hole	18 mm
Holes	4

DIMENSIONS

O	18 mm
PCD	125 mm
ØDi-1	78 mm

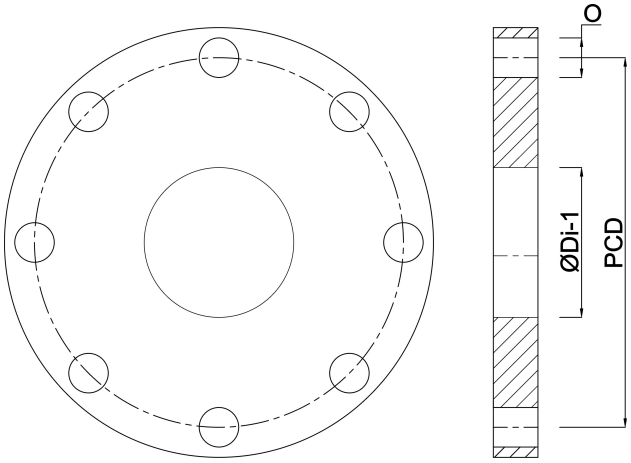

Last modified date: 30/10/2026

Bosta UK Ltd.
Reflection House
Olding Road
Bury St. Edmunds
Suffolk
IP33 3TA
T +44 (0) 1284 716580
E enquiries@bosta.co.uk
http://www.bosta.com