Backing ring PP/steel PP 200 mm SDR11 16bar DN200 black PN10 (0101941)



bosta
bringing water to life

TECHNICAL SPECIFICATIONS

Colour	black
Material	PP/steel
Surface treatment	PP
Class	SDR11
Pressure	16 bar
Size	200 mm
WebshopURL	https://www.bosta.com/en-gb/backing-ring-pp-steel-pp-200-mm-sdr11-16bar-dn200-black-pn10-0101941
DN	200
Flange	PN10
Outer ø	340 mm
Weight	2.64 kg
Thickness	25 mm
Bolt hole	22 mm
Holes	8

DIMENSIONS

O	22 mm
PCD	295 mm
ØDi-1	235 mm

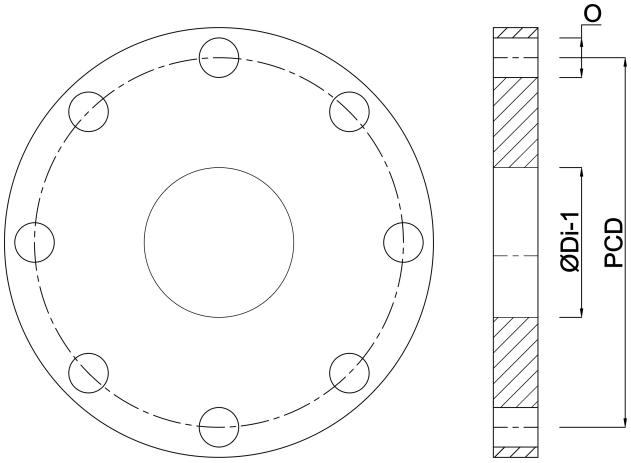

Last modified date: 30/10/2026

Bosta UK Ltd.
Reflection House
Olding Road
Bury St. Edmunds
Suffolk
IP33 3TA
T +44 (0) 1284 716580
E enquiries@bosta.co.uk
http://www.bosta.com