Foras Pressure set cast iron 1" female thread 7bar 4,7A 230VAC blue 24ltr type JA 106N 60 (7034786)

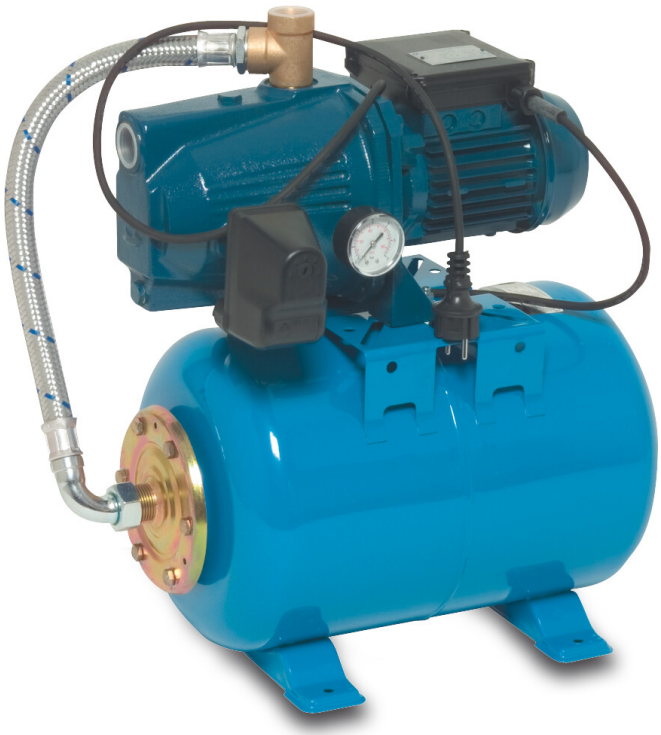

FORAS WATER PUMPS

bosta
bringing water to life

TECHNICAL SPECIFICATIONS

Colour	blue
Material	cast iron
Content	24 ltr
Pump body	cast iron
Material impeller 1	Noryl
Tank	24ltr ltr
Connection	female thread
Voltage	230VAC
Max. temperature	50 °C
Minimum medium temperature (continuous)	0 °C
Impellers	1
Height	525 mm
Press	1 "
Maximum ambient temperature	40 °C
Type	JA 106N 60
Max. head	50,9 m

bosta
bringing water to life

Size	1"
WebshopURL	https://www.bosta.com/en-gb/foras-pressure-set-cast-iron-1-female-thread-7bar-4-7a-230vac-blue-24ltr-type-ja-106n-60-7034786
Power	0.74 kW
Ampere	4,7 A
Max flow rate	4.2 m^3/h
Pressure	7 bar

DIMENSIONS

H-1	420 mm
H-2	525 mm
L	560 mm
Length	560 mm
W-1	260 mm
Width	260 mm

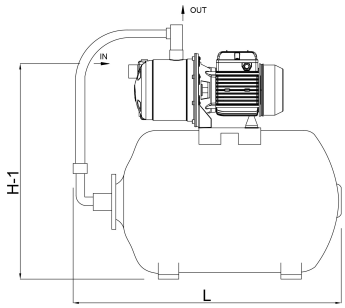

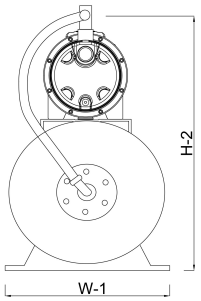

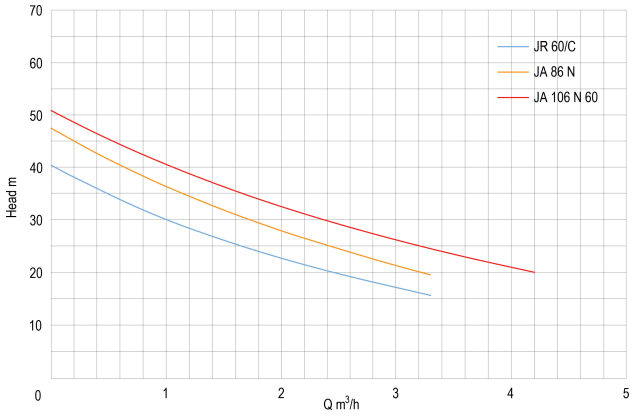

PRODUCT INFORMATION

Complete with 24 ltr. horizontal tank, pressure gauge and pressure switch. Ready for installation by a qualified electrician. Pump will be supplied with cable and DIN plug. UK / DIN plug included for UK deliveries

Last modified date: 27/11/2026

Bosta UK Ltd.
Reflection House
Olding Road
Bury St. Edmunds
Suffolk
IP33 3TA
T +44 (0) 1284 716580
E enquiries@bosta.co.uk
http://www.bosta.com

bosta
bringing water to life