Profec Backing ring PVC-U 140 mm 16bar DN125 grey PN10/16 (0110928)



PROFEC

bosta
bringing water to life

TECHNICAL SPECIFICATIONS

Colour	grey
Material	PVC-U
Suitable for	0110908
Suitable for	
Size	140 mm
Bolt	M16x130
Packaging	17 pcs
WebshopURL	https://www.bosta.com/en-gb/profec-backing-ring-pvc-u-140-mm-16bar-dn125-grey-pn10-16-0110928
DN	125
Inner ø	165 mm
Flange	PN10/16
Outer ø	248 mm
Weight	0.676 kg
Thickness	26 mm
Pressure	16 bar
Bolt hole	18 mm

Holes	8

DIMENSIONS

Db	248 mm
O	18 mm
PCD	210 mm
ØDi-1	147 mm

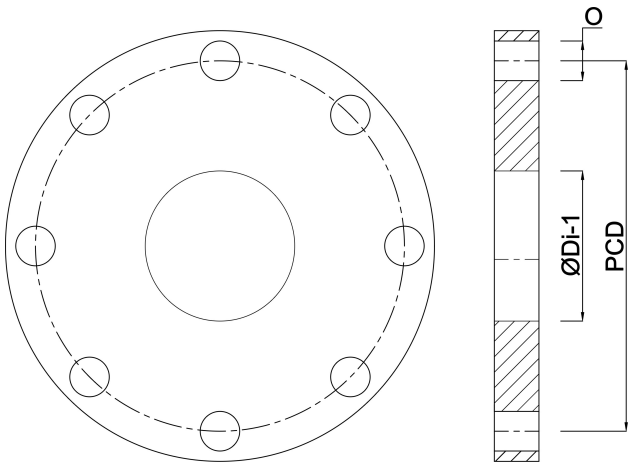

Last modified date: 30/10/2026

Bosta UK Ltd.
Reflection House
Olding Road
Bury St. Edmunds
Suffolk
IP33 3TA
T +44 (0) 1284 716580
E enquiries@bosta.co.uk
http://www.bosta.com