Profec Backing ring PVC-U 32 mm 16bar DN25 grey PN10/16 (0110920)



PROFEC

bosta
bringing water to life

TECHNICAL SPECIFICATIONS

Colour	grey
Material	PVC-U
Suitable for	0110900
Suitable for	
Size	32 mm
Bolt	M12x70
Packaging	120 pcs
WebshopURL	https://www.bosta.com/en-gb/profec-backing-ring-pvc-u-32-mm-16bar-dn25-grey-pn10-16-0110920
DN	25
Inner ø	42 mm
Flange	PN10/16
Outer ø	117 mm
Weight	0.12 kg
Thickness	14 mm
Pressure	16 bar
Bolt hole	14 mm

Holes	4

DIMENSIONS

Db	117 mm
O	14 mm
PCD	85 mm
ØDi-1	42 mm

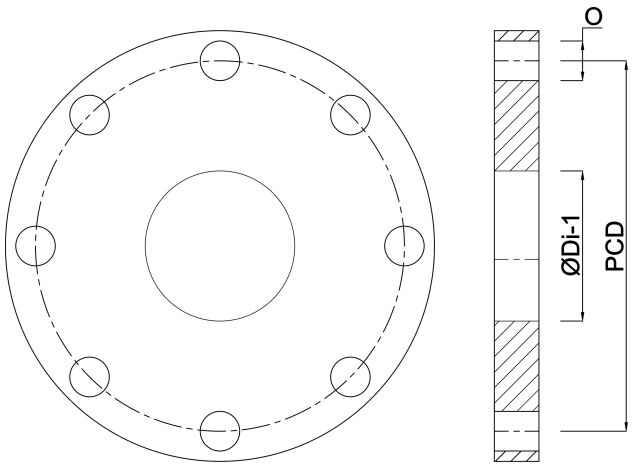

Last modified date: 30/10/2026

Bosta UK Ltd.
Reflection House
Olding Road
Bury St. Edmunds
Suffolk
IP33 3TA
T +44 (0) 1284 716580
E enquiries@bosta.co.uk
http://www.bosta.com