Profec Backing ring PVC-U 225 mm 10bar DN200 grey PN10 (0110933)



PROFEC

bosta
bringing water to life

TECHNICAL SPECIFICATIONS

Colour	grey
Material	PVC-U
Suitable for	0110913
Suitable for	
Size	225 mm
Bolt	M20x160
Packaging	10 pcs
WebshopURL	https://www.bosta.com/en-gb/profec-backing-ring-pvc-u-225-mm-10bar-dn200-grey-pn10-0110933
DN	200
Inner ø	250 mm
Flange	PN10
Outer ø	340 mm
Weight	1.2 kg
Thickness	32 mm
Pressure	10 bar
Bolt hole	22 mm

Holes	8

DIMENSIONS

Db	340 mm
O	22 mm
PCD	295 mm
ØDi-1	250 mm

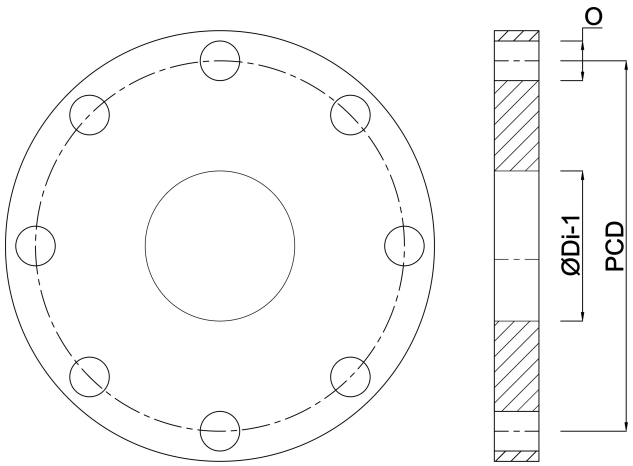

Last modified date: 30/10/2026

Bosta UK Ltd.
Reflection House
Olding Road
Bury St. Edmunds
Suffolk
IP33 3TA
T +44 (0) 1284 716580
E enquiries@bosta.co.uk
http://www.bosta.com