Backing ring PP/steel PP 250 mm SDR11 16bar DN250 black PN10 (7031732)



bosta
bringing water to life

TECHNICAL SPECIFICATIONS

Colour	black
Material	PP/steel
Surface treatment	PP
Class	SDR11
Pressure	16 bar
Size	250 mm
WebshopURL	https://www.bosta.com/en-gb/backing-ring-pp-steel-pp-250-mm-sdr11-16bar-dn250-black-pn10-7031732
DN	250
Flange	PN10
Outer ø	409 mm
Weight	6.27 kg
Thickness	30 mm
Bolt hole	22 mm
Holes	12

DIMENSIONS

O	22 mm
PCD	350 mm
ØDi-1	288 mm

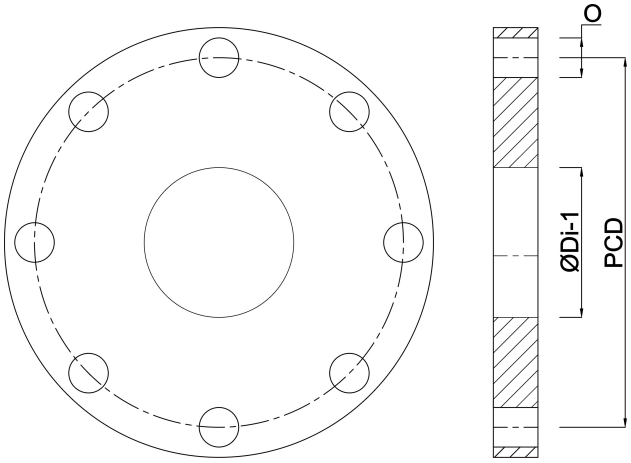

Last modified date: 30/10/2026

Bosta UK Ltd.
Reflection House
Olding Road
Bury St. Edmunds
Suffolk
IP33 3TA
T +44 (0) 1284 716580
E enquiries@bosta.co.uk
http://www.bosta.com