Profec Adaptor socket PVC-U 40/50 mm x 1 1/2" glue socket/glue spigot x female thread 10bar grey (0100263)



PROFEC

bosta
bringing water to life

TECHNICAL SPECIFICATIONS

Colour	grey
Material	PVC-U
Connection	glue socket/glue spigot x female thread
Pressure	10 bar
Size	40/50 mm x 1 1/2"
WebshopURL	https://www.bosta.com/en-gb/profec-adaptor-socket-pvc-u-40-50-mm-x-1-1-2-glue-socket-glue-spigot-x-female-thread-10bar-grey-0100263

DIMENSIONS

F-2	25 mm
L	65 mm
P-1	26 mm
ØDi-1	1 1/2 "
ØDi-2	40 mm
ØDo-3	50 mm

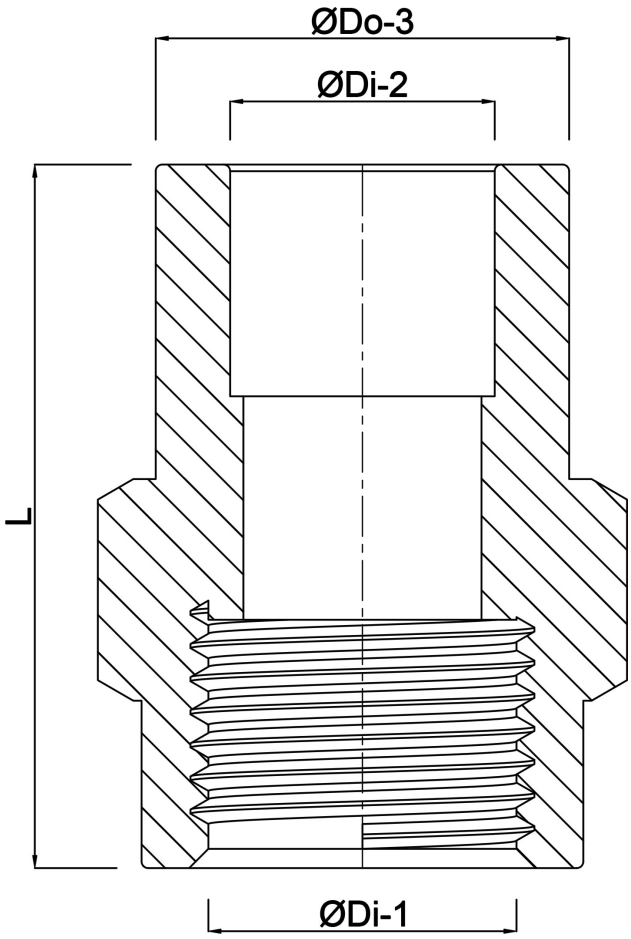

Last modified date: 30/10/2026

Bosta UK Ltd.
Reflection House
Olding Road
Bury St. Edmunds
Suffolk
IP33 3TA
T +44 (0) 1284 716580
E enquiries@bosta.co.uk
http://www.bosta.com

bosta
bringing water to life