# Profec Long bend 90° PVC-U 140 mm glue socket 12,5bar grey type made from tubing (0110235)



PROFEC

bosta
bringing water to life

# TECHNICAL SPECIFICATIONS

| | |
|---|---|
| Colour | grey |
| Type | made from tubing |
| Material | PVC-U |
| Connection | glue socket |
| Size | 140 mm |
| WebshopURL | https://www.bosta.com/en-gb/profec-long-bend-90-pvc-u-140-mm-glue-socket-12-5bar-grey-type-made-from-tubing-0110235 |
| Pressure | 12,5 bar |

# DIMENSIONS

| | |
|---|---|
| Cb-1 | 333 mm |
| Cb-2 | 333 mm |
| Mold | hand formed |
| ØDi-1 | 140 mm |
| ØDi-2 | 140 mm |
| ß | 90 ° |

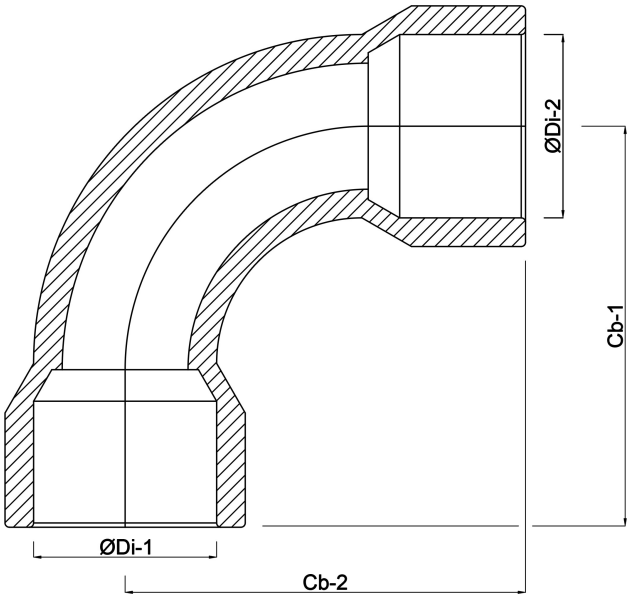


# Last modified date: 30/10/2026

Bosta UK Ltd.
Reflection House
Olding Road
Bury St. Edmunds
Suffolk
IP33 3TA
T +44 (0) 1284 716580
E enquiries@bosta.co.uk
http://www.bosta.com