Profec Flange welding neck steel DN80 x 88,9 mm DIN flange x butt welding black PN16 (1180483)



PROFEC

bosta
bringing water to life

TECHNICAL SPECIFICATIONS

Colour	black
Material	steel
Connection	DIN flange x butt welding
DIN Standard	DIN 2633
Flange	PN16
Size	DN80 x 88,9 mm
WebshopURL	https://www.bosta.com/en-gb/profec-flange-welding-neck-steel-dn80-x-88-9-mm-din-flange-x-butt-welding-black-pn16-1180483
Outer ø	200 mm
Weight	3.82 kg
Height	50 mm
Thickness	20 mm
PCD	160 mm
Bolt hole	18 mm
Holes	8

DIMENSIONS

O	18 mm
PCD	160 mm
ØDi-1	82.5 mm

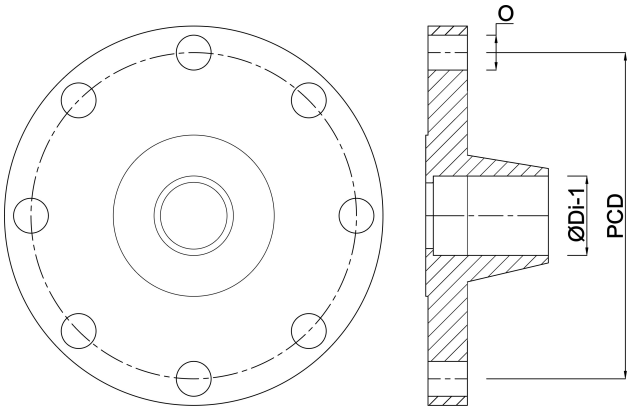

Last modified date: 01/11/2026

Bosta UK Ltd.
Reflection House
Olding Road
Bury St. Edmunds
Suffolk
IP33 3TA
T +44 (0) 1284 716580
E enquiries@bosta.co.uk
http://www.bosta.com

bosta
bringing water to life