Profec 3-piece ball valve stainless steel 316 1/2" female thread 69bar (0090953)

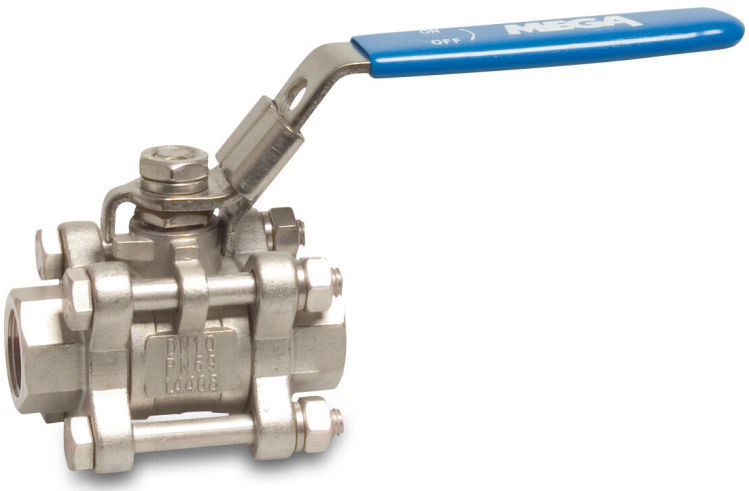

PROFEC

bosta
bringing water to life

TECHNICAL SPECIFICATIONS

Material	stainless steel 316
Operation	lever
Colour lever	blue
Handle material	stainless steel
Material housing	stainless steel 316
Material seal	PTFE
Connection	female thread
Temperature range	-10°C - 150°C
Pressure	69 bar
Size	1/2"
WebshopURL	https://www.bosta.com/en-gb/profec-3-piece-ball-valve-stainless-steel-316-1-2-female-thread-69bar-0090953

DIMENSIONS

Ct-1	49 mm
F-1	14.8 mm
F-2	14.8 mm

Lb	62 mm
R	100 mm
ØDf	15 mm
ØDi-1	1/2 "
ØDi-2	1/2 "

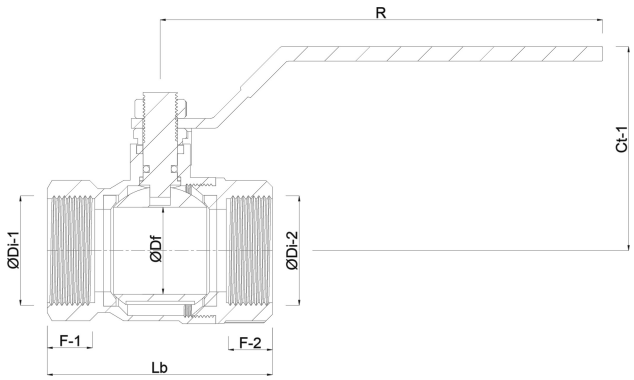

PRODUCT INFORMATION

Full flow.

Last modified date: 30/10/2026

Bosta UK Ltd.
Reflection House
Olding Road
Bury St. Edmunds
Suffolk
IP33 3TA
T +44 (0) 1284 716580
E enquiries@bosta.co.uk
http://www.bosta.com