Profec Cap PVC-U 1/2" female thread 10bar grey type plain (0110575)

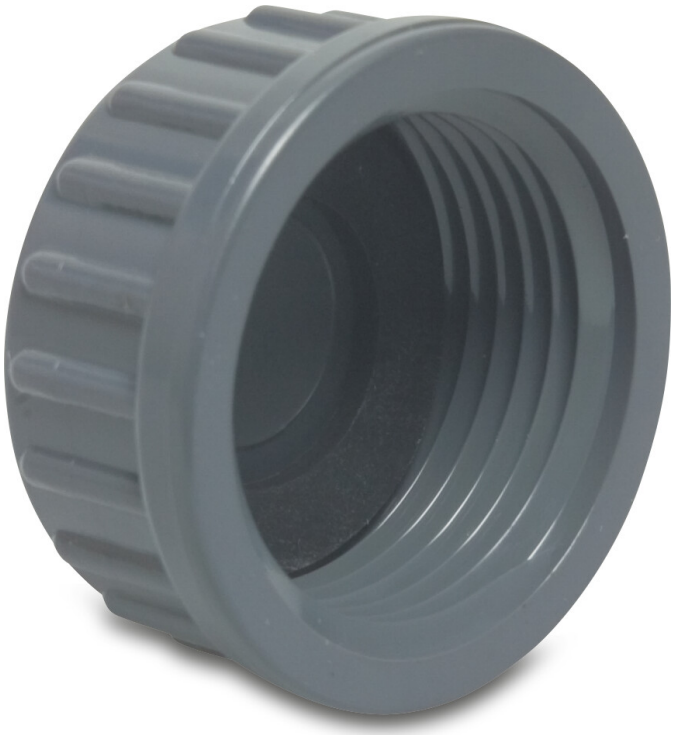

PROFEC

bosta
bringing water to life

TECHNICAL SPECIFICATIONS

Colour	grey
Type	plain
Material	PVC-U
Material seal	EPDM
Connection	female thread
Pressure	10 bar
Size	1/2"
WebshopURL	https://www.bosta.com/en-gb/profec-cap-pvc-u-1-2-female-thread-10bar-grey-type-plain-0110575

DIMENSIONS

H	16.5 mm
ØDi-1	1/2 "

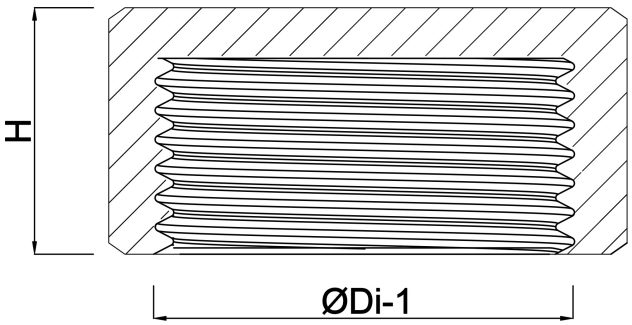

PRODUCT INFORMATION

With flat rubber seal

Last modified date: 30/10/2026

Bosta UK Ltd.
Reflection House
Olding Road
Bury St. Edmunds
Suffolk
IP33 3TA
T +44 (0) 1284 716580
E enquiries@bosta.co.uk
http://www.bosta.com

bosta
bringing water to life