# Backing ring PVC-U 200 mm x 7" 16bar DN175 grey PN10/16 (0160933)



bosta
bringing water to life

# TECHNICAL SPECIFICATIONS

| | |
|---|---|
| Colour | grey |
| Material | PVC-U |
| Pressure | 16 bar |
| Holes | 8 |
| Suitable for | 0160910 |
| Size | 200 mm x 7" |
| Packaging | 8 pcs |
| WebshopURL | https://www.bosta.com/en-gb/backing-ring-pvc-u-200-mm-x-7-16bar-dn175-grey-pn10-16-0160933 |
| DN | 175 |
| Inner ø | 227 mm |
| Flange | PN10/16 |
| Outer ø | 343 mm |
| Thickness | 32 mm |
| Bolt hole | 22 mm |

# DIMENSIONS

| | |
|---|---|
| O | 22 mm |
| PCD | 295 mm |
| ØDi-1 | 227 mm |

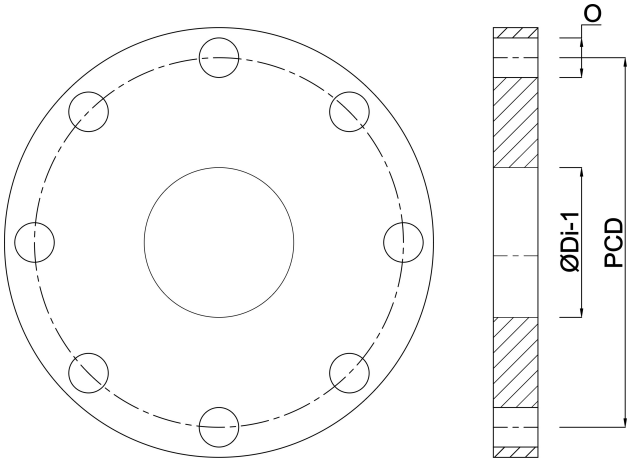


## Last modified date: 31/10/2026

Bosta UK Ltd.
Reflection House
Olding Road
Bury St. Edmunds
Suffolk
IP33 3TA
T +44 (0) 1284 716580
E enquiries@bosta.co.uk
http://www.bosta.com