Profec Nr. 90 Elbow 90° stainless steel 316 3/4" female thread 16bar (0080009)



PROFEC

bosta
bringing water to life

TECHNICAL SPECIFICATIONS

Material	stainless steel 316
Connection	female thread
Fitting nr.	Nr. 90
Pressure	16 bar
Max. temp.	100 °C
Size	3/4"
WebshopURL	https://www.bosta.com/en-gb/profec-nr.-90-elbow-90-stainless-steel-316-3-4-female-thread-16bar-0080009

DIMENSIONS

Cb-1	30 mm
Cb-2	30 mm
ØDi-1	3/4 "
ØDi-2	3/4 "
ß	90 °

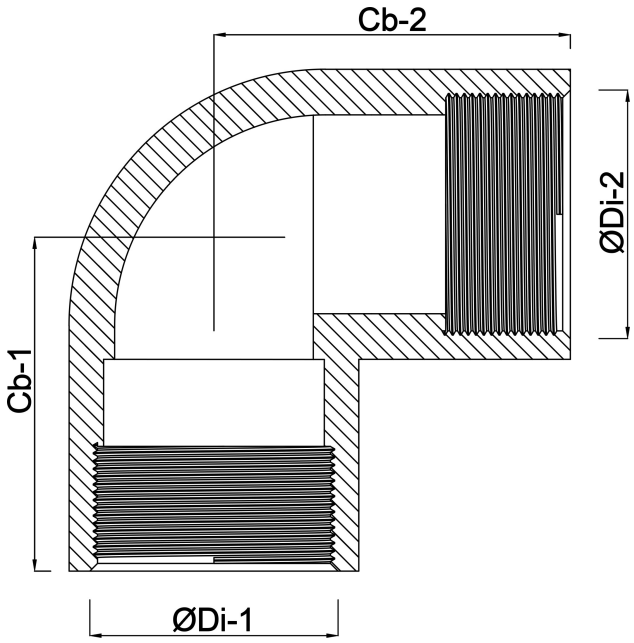

Last modified date: 30/10/2026

Bosta UK Ltd.
Reflection House
Olding Road
Bury St. Edmunds
Suffolk
IP33 3TA
T +44 (0) 1284 716580
E enquiries@bosta.co.uk
http://www.bosta.com

bosta
bringing water to life